BE124 GENERATOR CONTROLLER

SUITABLE FOR 50/60Hz INDUSTRIAL AND 400Hz GPU

The information in this document may be subject to change without notice. No part of this document may be copied or reproduced in any form or by any means without the prior written consent of Bernini Design Company. Bernini Design assumes no responsibility for any errors which may appear in this instruction manual or in the wiring diagrams. Although Bernini Design has taken all possible steps to ensure that the User Manual is completely, error free and up-to-date, we accept that errors may occur. Any future updates will be included in our official website www.bernini-design.com. If you encounter problems with this instruction manual, please contact us.

Customer Support BERNINI DESIGN SRL ITALY

e-mail: **bernini@bernini-design.com** mobile: ++40 721 241 361. Tel:++39 335 7077148.

Warranty

Bernini Design SRL (hereinafter BD) warrants that Be124 shall be free from defect in material or workmanship for a period of 3 years from the BD delivery date. BD shall, at its discretion, repair or replace the product without charge. BD shall return the Be124 to the buyer with the Default parameters at no extra charge. The buyer shall furnish sufficient information on any alleged defects in the product, so as to enable BD to determine there cause and existence. If the Be124 is not defective, or the product is defective for reason other than covered by this warranty, the buyer will be charged accordingly. This warranty shall not apply if the Be124 has not been used in accordance with the User Manual and other operating instructions, particularly if any defects are caused by misuse, improper repair attempts, negligence in use or incorrect handling. Then the purchase is non-refundable.

This equipment complies with the EMC protection requirements

CE

!! WARNING !!

High voltage is present inside the Be124. To avoid any electric-shock hazard, operating personnel must not remove the protective cover. Do not disconnect the grounding connection. The Be124 can start the engine at anytime. Do not work on equipment, which is controlled by the Be124. When servicing the engine, disconnect the battery and battery charger. We recommend that warning signs be placed on equipment indicating the above.

!! WARNING !!

!!! WARNING !!!: do not disconnect the plugs of Be124 when the engine is running. By opening the secondary circuit of the C.T.'s you can generate a dangerous voltage. Never disconnect a connection of a CT when generator is working. You can seriously damage the controller and putting yourself in a serious risk of electrical shock.

!!! WARNING !!! GENERATOR VOLTAGE IS EXPOSED WITHIN THE BE124 AND ANCILLARY CIRCUITRY EVEN WHEN THE LED INDICATORS PLACED ON THE FRONT PANEL ARE OFF.

GENERATOR CONTROLLER ALPHABETICAL INDEX

BE124 CENTURION GENERATOR CONTROLLER - Table of Contents

!! WARNING !!

The Be124 can start the engine at anytime. Do not work on equipment, which is controlled by the Be124. When servicing the engine, disconnect the battery and battery charger. We recommend that warning signs be placed on equipment indicating the above.

GENERATOR VOLTAGE IS EXPOSED WITHIN THE BE124 AND ANCILLARY CIRCUITRY EVEN WHEN THE GREEN LEDs GCB IS TOTALLY OFF & EVEN ALL INDICATORS PLACED ON THE FRONT PANEL ARE OFF.

1.0 - GENERATOR CONTROLLER INTRODUCTION

The Be124 is a 3-Phase Generating Set & Engine controller that integrates a Data logger, an Oscilloscope and a Transient recorder. The Be124 provides visual indication by means of LEDs and graphic display for all parameters and alarms. The Be124 features programmable settings and complies with NFPA110 CAN/CSA-C282-M89 regulations. It features RS485 and isolated Can bus (SAE-J1939). The figure illustrates the layout of the front panel. If Can bus is not available, the Be124 can interface with analog sensors and configurable switches for Oil Pressure, Temperature & Fuel Level monitoring.

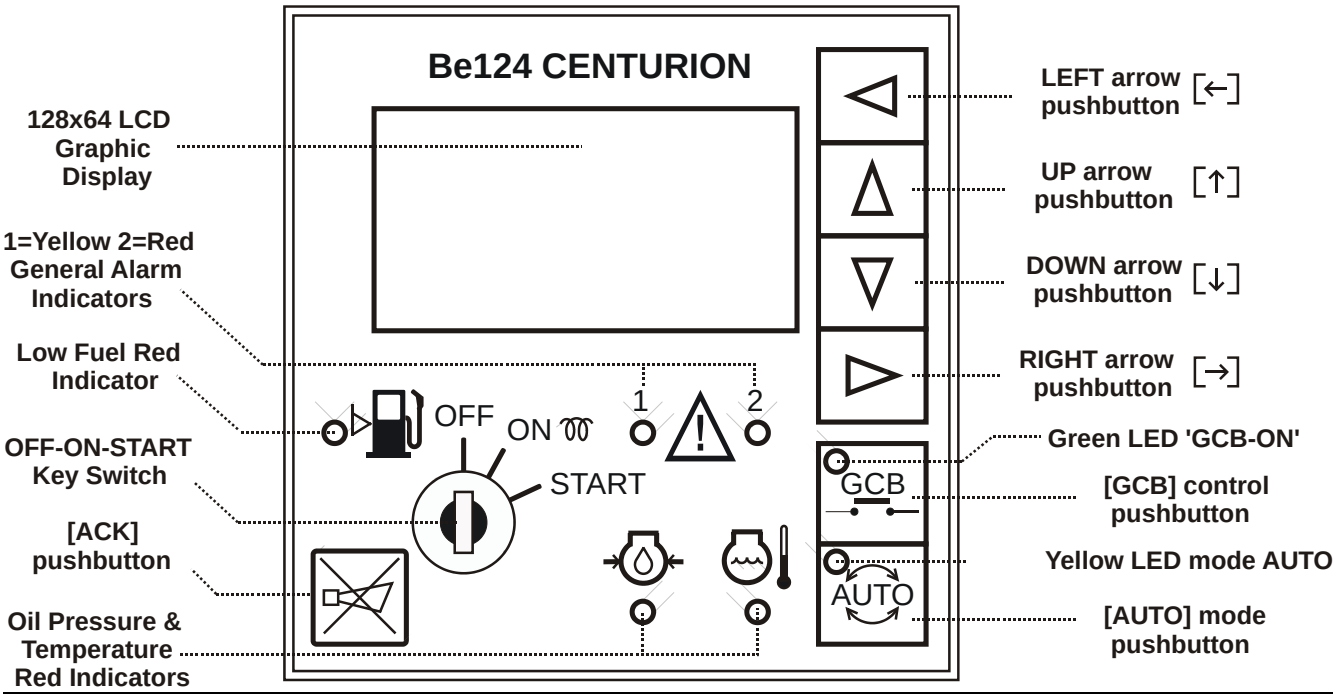

Section 2.0 - SELECTING AN OPERATIONAL MODE

The mode of operation is selected via a key switch and an **[AUTO]** pushbutton. If the Be124 was in **TEST** or **AUTO** mode prior to power down, when you switch on the battery supply, the Be124 enters the **AUTO** mode of operation. In the other cases, you have to start the engine manually.

2.1 - OFF mode

Turn the key to 'OFF': you switch **OFF** the Be124 and clear the fault alarms. You are allowed to program the parameters or modify the settings (see 22.0). The backlight of the display will shutdown automatically after a 30 minutes timeout (it is programmable; see 9.0). To exit the OFF mode turn the key to 'ON'.

2.2 - MANUAL mode: starting & stopping the engine. Control of the Generator Circuit Breaker (GCB)

Turn the key to 'ON' position. After the automatic 5 second self-check turn the key to 'START' position until engine starts. The display will automatically open the 'Be124 Status' page (see 5.0). During cranking, depending on the efficiency of the battery, the Be124 may turn off the backlight of the display. Wait until the green LED GCB-ON starts blinking: it means that the generator is working within the settings. Push the **[GCB](*)** pushbutton to close the generator circuit breaker: the green LED **[GCB]** will light and remain lit. Use the arrow buttons to browse the instrumentation (see 5.0 & 6.0). Push **[ACK]** at anytime to open the 'Be124 Status' page. Push the **[GCB]** pushbutton to open the generator circuit breaker. To stop the engine, turn the key to 'OFF' position; the messages **[MODE OFF]** & **[STOPPING]** will appear on the display for the programmed 'Stop Solenoid' time (see 11.4.7). After a complete stop, you can restart the engine.

(*) If the generator parameters (e.g. V/Hz) are outside limits, the Be124 may trigger an alarm activation.

2.3 - GENERATOR CONTROLLER AUTO MODE

!!! WARNING: ENGINE MAY START IMMEDIATELY !!!!
GENERATOR VOLTAGE IS EXPOSED WITHIN THE Be124 AND ANCILLARY CIRCUITRY EVEN WHEN THE ALL LEDs ARE TOTALLY OFF

The Be124 Centurion can start the engine at anytime. Do not work on equipment, which is controlled by the Be124. When servicing the engine, disconnect the battery and battery charger. We recommend that warning signs be placed on equipment indicating the above.

Turn the key to 'ON' position. Push the **[AUTO]** pushbutton until the yellow LED **[AUTO]** illuminates. The engine starts when the Be124 detects a request to start from a configurable input (see table 11.8 options [12] & [13]). The green LED GCB blinks when the generator is working within the programmed limits. After the **[WARM UP]** time (see 11.4.6) the generator circuit breaker (GCB) will close automatically. Use the arrows to browse the instrumentation (see 5.0 & 6.0). Push **[ACK]** at anytime to open the 'Be124 Status' page. When there is a request to stop the engine, the Be124 opens the GCB and triggers the **[COOL DOWN]** timer (see 11.4.6). After that, the Be124 will stop the engine. In 'auto mode', the Be124 will periodically test the engine if the scheduler is correctly programmed (see 10.2). During the test, the yellow LED **[AUTO]** will continue to blink; the display indicates the message **[TEST]**. To stop the engine, turn the key to 'OFF' position at anytime. The display continuously updates you about what Be124 is doing. The Engine may start in case you programmed the AUTOSTART function (see 10.4).

2.4 - GENERATOR CONTROLLER TEST MODE

Turn the key to 'ON' position. Push and hold the **[AUTO]** pushbutton for at least 10 seconds until the display indicates the message **[TEST MODE]** and the yellow LED AUTO starts blinking. The Be124 will start the engine immediately. The controller will enable the generator circuit breaker (GCB) only if not otherwise programmed by the parameter **[GCB TEST CONTROL]** (see 10.3). To exit the 'TEST' mode, push the **[AUTO]** pushbutton: the controller will enter the 'MAN' mode of operation. To stop the engine immediately, turn the key to 'OFF' position.

Section 3.0 - LEDs INDICATORS / TESTING OF THE LAMPS (LEDS)

The table describes the functions of the indicators on the front panel. To test the LEDs, supposing Be124 is in 'OFF' mode of operation, turn the key to 'ON': the Be124 will turn on the indicators for a few seconds.

LED indicator	Description		LED indicator	Description
Fuel Alarm (Red)	It turns on when tank is empty (shutdown).		Auto / Test Mode (Yellow)	- It turns in **AUTO** mode of operation (see 2.0). - It blinks in **TEST** mode of operation (see 2.4). - It blinks when the scheduler activates the generator (see 10.2).
Oil Pressure Alarm (Red)	It turns on in case of Low Oil Pressure (see 11.4.11). The engine shuts down.			
Engine Temperature (Red)	It turns on in case of High Temperature (see 11.4.10). The engine shuts down.			
General Alarms	(1)Yellow indicator: it turns when a warning occur (Can bus, low battery, etc..). (2) Red indicator: it turns on in case of Emergency shut down.		Generator Circuit Breaker (Green)	-It turns on when the GCB is closed. -It blinks when the electrical parameters are within the settings. -It turns off when GCB is open or the generator parameters are out of limits.

Section 4.00 GENERATOR CONTROLLER MAIN MENU & FUNCTIONS

Push **[ACK]** and push **[←]**; the **Main Menu** appears on display. Push **[↓]** to browse the list and push **[→]** to enter the function you need or repeatedly push **[↑]** to proceed to the top of the **Main Menu**.

Main menu	Section	You can: ...
ENGINE METERING	5.0	... read the engine instruments
GENSET METERING	6.0	... read the generator instruments
ALARM MONITORING	7.0	... read information about active Alarms & Memory Events
SET DATE & TIME	8.0	... configure the real time clock (set date & time)
DISPLAY-LANGUAGE	9.0	... set preferences for the display
USER PARAMETERS	10.0	... program & modify the User Parameters
OEM PARAMETERS	11.0	... program & modify the OEM Parameters
RESET AND CLEAR	12.0	... clear hours run, various counters, energy meter and others
USER PASSWORD	13.0	... insert a User password
OEM PASSWORD	13.0	... insert a OEM password
DATA LOGGER	14.0	... configure & use the data logger
OSCILLLOSCOPE	15.0	... configure & use the oscilloscope
PUSHBUTTONS TEST	16.0	... test the push-buttons
SWITCHES TEST	17.0	... test the digital inputs
SENSORS TEST	18.0	... test the analogue inputs
OUTPUTS TEST	19.0	... test the digital outputs
CANBUS TEST	20.0	... test the J1939 port
RS485 TEST	20.0	... test the RS485 port
PICKUP TEST	20.0	... calibrate the measurements
CALIBRATION	20.1	... calibrate the measurements (page 25)
ABOUT	26.1	… find out details about hardware / software version

Section 5.0 – ENGINE METERING & BE124 STATUS (to open it push **[ACK]** at anytime)

AUTO MODE
STARTING
CRANK (*) 05
GCB OFF BT 11.5V

Example: Start. The display indicates **[STARTING]** and indicates the count down of the **[CRANK]** timer.

AUTO MODE
RUN ON LOAD
0:01:50
GCB ON BT 13.8V

Example: Run on Load. Be124 in AUTO mode, the GCB is closed, battery voltage is 13.8V. Runtime since engine started: one minute and fifty seconds.

The Be124 'Status Page' provides information about the Be124 operational status, current status of timers , current mode of operation and so on. To browse the engine instruments push **[↓]**.

RUNNING (the engine is running)	**NOT RUNNING** (the engine is not running)	**RUN ON LOAD** (the engine is running on load)
REST (rest time in between starting attempts)	**STARTING** (Be124 is going to start the engine)	**CRANK** (Be124 is cranking the engine)
STOPPING (Be124 is stopping the engine)	**COOLING** (the engine is running off-load before stopping)	**WARM UP** (the engine is running off-load before activating the GCB)
IDLE SPEED (the Be124 instructs the engine to run at idle speed)	**PREGLOW** (the Be124 is driving the Pre-glow before starting)	**PRELUBE** (the Be124 is driving the Pre-lube before starting)
REMOTE DEMAND (an external device is requesting the engine to run via the serial interface)	**ON-SITE DEMAND** (This message takes place when you activate an input programmed with option [12] / [13] or in case the AUTOSTART triggers a start of the engine as explained section 10.4)	**AUTO/MANUAL/OFF/TEST MODE** (it indicates the current mode of operation.)
GCB: ON or OFF (it indicates when the generator circuit breaker is closed or open)		**BT XX.X V** (it indicates the voltage of the battery)

(*) Note: if you program the Scheduler (see 10.2), the display will overwrite, for a short time, the day (e.g. Mo..Tu…) & time (e.g. START 08:30 /STOP 08:35) of the test every 10 seconds (supposing the Be124 is in Auto mode of operation and engine not running). This helps to visually remind of the approaching test date.

Push **[ACK]** to open the 'Be124 Status' page. Use **[↑]** or **[↓]** to browse the pages.

Section 5.01 **SPEED RPM [XXXX]** **OIL BAR [XX.X]** **COOLANT °C [XXX]** **OIL °C [XXX]**	It indicates Speed / Oil Pressure and Temperatures. (see note **[*]** on the bottom)	Section 5.08 **TURBO BAR** **SPN102 [XXX]** **EXHAUST °C** **SPN173 [XXX]**	It indicates measurements about data sent by the ECU. You can find additional information in your engine user manual.
Section 5.02 **FUEL LEVEL [XX %]** **PUMP STATUS OFF** **BATTERY (V) [XX.X]** **ALTERNATOR [XX.X]**	It indicates Fuel Level and voltages of battery and charger alternator.	Section 5.09 **COOLANT %** **SPN111 [XXX]** **COOLANT BAR** **SPN109 [XXXX]**	See above...
Section 5.03 **AUX °C [XXX]** **HOURS RUN [XXXX]** **N° OF START [XXXX]** **RENTAL H [XXXX]**	It indicates various information and the remaining hours-run of the Rental contract (see section 10.3).	Section 5.10 **DEMANDE TORQUE** **SPN512 [XX]** **ACTUAL TORQUE** **SPN513 [XX]**	See above...
Section 5.04 **SERVICE 1 [XXXX]** **SERVICE 2 [XXXX]** **SERVICE 3 [XXXX]**	It indicates the status of the Maintenance timers (see section 10.1).	Section 5.11 **CRANKCASE BAR** **SPN101 [XXX]** **BOOST °C** **SPN105 [XXX]**	See above...
Section 5.05 **OIL LEVEL** **SPN98 [XXX]** **WATER IN FUEL** **SPN97 [XXX]**	It indicates measurements about data sent by the ECU. You can find additional information in your engine user manual.	Section 5.12 **INTAKE BAR** **SPN106 [XXX]** **AIR FILTER BAR** **SPN107 [XXX]**	See above...
Section 5.06 **FUEL °C** **SPN174 [XXX]** **FUEL BAR** **SPN94 [XXX]**	See above...	Section 5.13 **LOAD** **SPN92 [XX]** **ECU ENGINE HOURS** **[XXXXXXX]**	See above...
Section 5.07 **FUEL RATE** **SPN183 [XX]** **PEDAL %** **SPN91 [XX]**	See above...	**[*] Important notes: if the Can bus is connected, the display indicates OIL PRESSURE & COOLANT TEMPERATURE. If a Canbus is not available you can connect a sensor (see sections 27.0 & 28.0), but is it mandatory that you set at least a warning limit in order to enable the reading on the display. Otherwise, Be124 will hide the measurement (not consistent).**	

NOTE: [XXXX] indicates numerical digits or [- - - -] if measurement is not available or consistent

NOTE1: depending on the kind of engine you are using, the Be124 may automatically hide some information.
NOTE2: the measurements provided by sensors are disabled in OFF mode of operation (to reduce current consumption).

Section 6.0 - GENSET METERING (VIEWING THE INSTRUMENTS)

Push **[ACK]** to open the 'Be124 Status' page. Push the **[→]** arrow to enter the genset instrumentation pages. Use **[↑]** or **[↓]** to browse the content of the pages. Push **[ACK]** at anytime to open the 'Be124 Status' page.

Section 6.01 **L1-L2 (V) [XXX]** **L2-L3 (V) [XXX]** **L3-L1 (V) [XXX]** **FREQUENCY [XXX]**	It indicates the voltages of the generator Phase to Phase and Frequency.	Section 6.06 **KVAR 1 [XXX]** **KVAR 2 [XXX]** **KVAR 3 [XXX]** **KVAR TOTAL [XXX]**	It indicates the Reactive Power for each Phase. A total Reactive Power measurement is also indicated.
Section 6.02 **L1-N (V) [XXX]** **L2-N (V) [XXX]** **L3-N (V) [XXX]** **SEQUENCE [XXX]**	Voltages of the generator Phase - N and sequence / rotation of the phases (CW / CCW). In single phase mode the Be124 indicates [- - - -].	Section 6.07 **PF 1 [X.XX]** **PF 2 [X.XX]** **PF 3 [X.XX]** **PF TOTAL [X.XX]**	It indicates the Power Factor for each Phase. A total Power Factor Measurement is also indicated.
Section 6.03 **CURRENT 1 [XXXX]** **CURRENT 2 [XXXX]** **CURRENT 3 [XXXX]** **EARTH FAULT [XXX]**	It indicates the currents of the generator & current of a 'Ground Fault' (C.T. size see 11.3.12). Earth Fault current features a 0.01A resolution when CT size is <100/5A.	Section 6.08 **TOTAL ENERGY** **[XXXXXXX] KWH** **31 DAYS ENERGY** **[↓] [XXXXXXX] KWH**	It indicates the total KWh and the amount of energy generated in the last 31 days. Push the **[↓]** button to open the 31-day Data Logger page.
Section 6.04 **KVA 1 [XXX]** **KVA 2 [XXX]** **KVA 3 [XXX]** **KVA TOTAL [XXX]**	It indicates the Apparent Power for each Phase. A total Apparent Power Measurement is also provided.	Section 6.09 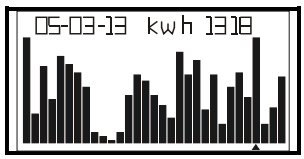 Note: the line on the right indicates the total Kwh from hour 00:00 until the hour you opened the screen. Be124 updates the log every hour.	Push the **[←]** or **[→]** to move the cursor on a particular day. The display will indicate the date and the Total Kwh in a particular day. Push **[↑]** to exit. You can clear the log by pushing (and hold) the **[ACK]** button for at least 5 seconds (the display will show the instructions)
Section 6.05 **KW 1 [XXX]** **KW 2 [XXX]** **KW 3 [XXX]** **KW TOTAL [XXX]**	It indicates the Active Power for each Phase. A total Active Power Measurement is also provided.		

NOTE: [XXXX] indicates numerical digits or [- - - -] if measurement is not available or consistent

NOTE: depending on the kind of alternator you are using, the Be124 may automatically hide some parameters.

Section 7.0 - ALARM MONITORING & EVENT LOG

This menu can contain up to 9 pages of active alarms tagged with date and times. It is possible to record up to 500 pages of historical events. A typical alarm page is indicated below (see section 23.0 for the list of all alarms):

Typical alarm page (to enter this page repeatedly push **[→]**)	
ALARMS PAGE 1/1 **LOW OIL PRESSURE** **WARNING 0,8 BAR** **DD/MM/YY HH:MM:SS** **EVENT PAGE 1** **LOW OIL PRESSURE** **WARNING 0,8 BAR** **DD/MM/YY HH:MM:SS**	This page opens automatically in case of alarm(s). Use **[↑]** or **[↓]** to browse the content of the pages. The alarms are also recorded in the Event History memory. To open the pages of the Event History repeatedly push the **[↓]** pushbutton. To exit the alarm page, push **[ACK]**: you open the 'Be124 Status' page (see 5.0). The Be124 records up to 500 events providing date & time information for warnings, shutdowns and other events. Use **[↑]** or **[↓]** to browse the content of the pages. Push **[ACK]** to exit and open the 'Be124 Status' page. **Note:** to cancel the Event History, use **[CLEAR EVENTS]** (see section 12.0).

Section 8.0 - SET DATE & TIME (REAL TIME CLOCK)

Push **[ACK]** to display the 'Be124 Status' page. Push **[←]** to open the **Main Menu**. Repeatedly push **[↓]** until you select **[SET DATE & TIME]**. Push **[→]** to open the page.

Display	Instructions
TIME 00:00:00 **DATE 01/01/00** **FORMAT DD/MM/YY** **SAVE [→]**	Use [↑] or [↓] to select a function. Push [→] to enter the numerical field. Push [↑] or [↓] to set a value. Push [←] to return. If you want to change the format, choose [**FORMAT]** and push [→]. Select the proper option by using [↑] or [↓]. Push [←] to return to the function. If the option [**DD/MM/YY]** is suitable for your requiremets, push [↓] to proceed. Push [→] to initiate the clock of Be124 at the correct local time (use an external clock reference).

Section 9.0 - DISPLAY & LANGUAGE

Push **[ACK]** to display the 'Be124 Status' page. Push **[←]** to open the **Main Menu**. Repeatedly push **[↓]** until you select **[DISPLAY-LANGUAGE]**. Push **[→]** to open the list of the functions.

Display	Instructions
LANGUAGE(*) ENGLISH **CONTRAST 7** **TIMEOUT 30 min** **BACKLIGHT 100%** **PRESSURE BAR** **TEMPERATURE °C**	A) - Use **[↑]** or **[↓]** to select a function B) - Push **[→]** to enter the function C) - Push **[↑]** or **[↓]** to choose the proper option or set a numerical value D) - Push **[←]** to exit You have options for BAR/PSI and/or °C/°F **(*) English, Itlian, Spanish & French.**
Note: **[TIMEOUT]** is the time-out that turns off the backlight of the display once you are no longer using the push-buttons (range 1-60 mins). The setting **[OFF]** will always maintains the backlight active (no time-out). The **[BACKLIGHT]** has three settings: 0% (no back light), 50% (average back light) and 100% (maximum back light). Contrast range: 0-15.	

Section 10.0 - USER PARAMETERS MENU

Use **[↑]** or **[↓]** to select this menu from the Main Menu (section 4.0) and push **[→]** to enter the menu.
The display will present the options **[READ PARAMETERS]** and **[MODIFY PARAMETER]** (access may require password).
The **[USER PARAMETERS]** menu contains the following functions:

Display	Section	Instructions
SERVICE TIMERS **TEST SCHEDULER** **MISCELLANEOUS** **AUTO START**	**10.1** **10.2** **10.3** **10.4**	Use **[↑]** or **[↓]** to select a function. Push **[→]** to enter the function.

10.1 - SERVICE TIMERS **(to access this menu see section 10.0)**

Display	Instructions
MAINTENANCE 1 **OFF** **MAINTENANCE 2** **OFF**	You can schedule the engine maintenance (oil change and so on). Push **[↓]** to choose the MAINTENANCE timer of your requirement. To disable a timer set the option [OFF]. The Maintenance timers 1 and 2, once expired, will generate a warning. [Maintenance 3] will automatically shutdown the engine. An alarm will be generated to remind you to carry out the maintenance routine. [↓ see next page ↓]

MAINTENANCE 3 **OFF** (range 0-9999 hours)	[↑ see previous page ↑] ***Programming:*** use **[↑]** or **[↓]** to select a timer. Push **[→]** to select the numerical field. Push **[↑]** or **[↓]** to set a value (example 300h). Push **[←]** to return to the function. The timers work only when engine is running. Push **[←]** to exit and follow the instructions on screen (save.. and so on). Once a timer is running, the remaining hours count is indicated in the 'Be124 Status' menu (see 5.04 SERVICE 1-2-3). When a timer expires, you are required to carry out the maintenance routine. To clear the alarm, and to restart the counter, turn the key to 'OFF'. Push & hold the button **[ACK]** for about 5 seconds. The Be124 will automatically restart the timer.

10.2 - AUTOMATIC TEST (SCHEDULER) (to access this menu see section 10.0)

Display	Description
START STOP **MO - -:- - - - :- -** **TU - -:- - - - :- -** **WE - -:- - - - :- -** **TH - -:- - - - :- -** **FR - -:- - - - :- -** **SA - -:- - - - :- -** **SU - -:- - - - :- -** **- -:- - = HH:MM** **(Example 08:30)**	You can set up the time to start / stop automatically the engine on specific days of the week. You are required to set up the date and time of the internal clock (see 8.0) before setting up the scheduler. Use **[↑]** or **[↓]** to select a day of the week. Push **[→]** to enter the START field. Use **[→]**, **[↑]** and **[↓]** to set HH:MM. Push **[→]** to enter the STOP field. Use **[→]**, **[↑]** and **[↓]** to set HH:MM. Repeatedly push **[←]** to return to the day selection. Do the same in case you want set up additional day(s) of the week. Push **[←]** to exit. The Scheduler triggers a test only in **AUTO** mode of operation. The 'Status Page' displays , for a short time, the programmed Day/Time every 10 seconds (see 5.0). The yellow LED AUTO will blink during the test. By programming the **[CB TEST CONTROL]** into 'ON' mode (see 10.3), the engine will run on load. Default programming is 'OFF' (the engine runs without load).

10.3 - MISCELLANEOUS (to access this menu see section 10.0)

Display	Description
RENTAL CONTRACT OFF **GCB TEST CONTROL OFF** **RUN TIMEOUT OFF** **RS485 NODE 1**	Use **[↑]** or **[↓]** to select a function. Push **[→]** to enter the numerical field. Push **[↑]** or **[↓]** to set a value. Push **[←]** to return to the function.
>[RENTAL CONTRACT]< You can set up to 9999 hours. When the remaining hours drop to less than 48, the **[RENTAL WARNING]** alarm is set off. At zero hours, the engine will shutdown. You are required to re-program the timer. Option **[OFF]** disables the **[RENTAL CONTRACT]** function (section 5.03 to read the hours remaining).	
>[GCB TEST CONTROL]< The option **[ON]** will enable the GCB when TEST mode is active. The option **[OFF]** will allow you to run the engine off-load.	
>[RUN TIMEOUT]< Maximum time allowed to run the engine in Auto Mode of operation (1 minute up to 23:00 hours). The option **[OFF]** disables the time-out and the engine will run until a stop is required. This function is a sort of protection in case you are no longer able to stop the engine in Auto mode of operation.	
>[RS485 NODE]< It allows you to select the node address on the Modbus network. Factory setting is [1] but you can choose any node in the range 1-127.	

10.4 - AUTO START (to access this menu see section 10.0)

Display	Description
LOW BATT. START **OFF (*)** **HIGH BATT. STOP** **OFF (*)** **TIMEOUT 5 mins** **(range 1-999 mins)** (*) factory setting =OFF. (Range 3.0-30.0VDC)	The AUTO START mode will allow you to automatically charge the battery. You are required to program a LOW BATT start (Be124 will automatically provides a 2 minutes by-pass delay) and HIGH battery stop or TIMEOUT (or both). The engine will stop automatically according to your settings. Use **[↑]** or **[↓]** to select a parameter. Push **[→]** to enter the numerical field. Use **[↑]** and **[↓]** to set a value. Repeatedly push **[←]** to return to the menu. AUTOSTART triggers a start only in **AUTO** mode of operation. The yellow LED 'AUTO' blinks during the Test. You can program the option [25] for an output. Be124, in this way, drives an external lamp (or relay) indicating when AUTO START is active (please note the activatioin begins as soon as the battery falls under the LOW BATT.START setting and terminates when the engine stops).

Section 11.0 - OEM PARAMETERS & ENGINE TYPE

Use **[↑]** or **[↓]** to select **[OEM PARAMETERS]** from the **Main Menu** (section 4.0). Push **[→]** to enter the menu.

OEM PARAMETERS	see:	Instructions
READ PARAMETERS **MODIFY PARAMETERS** **ENGINE TYPE**	11.1 11.1 11.2	The display will present the options **[READ PARAMETERS]** (to read only), **[MODIFY PARAMETERS]** (read/write) and **[ENGINE TYPE]** (read/write). We recommend that you limit the access by inserting an OEM password (see section 13.0).

11.1 - READ / MODIFY PARAMETERS

Use **[↑]** or **[↓]** to select this menu from the **[OEM PARAMETERS]** (see above). Push **[→]** to enter the menu.

OEM PARAMETERS	see:	OEM PARAMETERS	see:	OEM PARAMETERS	see:
GENERATOR PARAM. **ENGINE PARAM.** **SPEED PARAMETERS** **FUEL PARAMETERS**	11.3 11.4 11.5 11.6	**HOURS-HORN** **INPUTS PARAM.** **OUTPUTS PARAM.** **T SENSOR**	11.7 11.8 11.9 11.10	**FUEL SENSOR** **PRESSURE SENSOR** **RESTORE DEFAULTS**	11.10 11.10 11.11

11.2 - ENGINE TYPE SELECTION

Use **[↑]** or **[↓]** to select this Menu from the **[OEM PARAMETERS]** (section 4.0). Push **[→]** to enter the menu.

Engine type selection	Instructions
[←]EXIT / SAVE / BACK **CONVENTIONAL** **USE [↑] OR [↓]** **EXIT BACK** **[←] SAVE [→]**	A)- Use the **[↑]** or **[↓]** to select the type of engine that matches your application. B)- Push the **[←]** to open the confirmation page. C)- Push the **[←]** to quit or to save the configuration (or **[→]** to return to the engine type selection page). D)- After saving, we recommend that you remove the battery supply for a few seconds. When you reconnect the supply verify the initial page on the display: it must indicate the type of the engine you programmed before.

Table 11.2 List of engine types (the list is subject to change without prior notice)

[1]	Conventional		[9]	Perkins '03 '08		[17]	Iveco Vector
[2]	Standard J1939		[10]	Perkins 1100		[18]	MTU
[3]	Volvo EDC3		[11]	Cummins 850		[19]	Kubota
[4]	Volvo EDC4		[12]	Cummins PCC13XX		[20]	Isuzu
[5]	Volvo EMS2		[13]	Deutz EMR2		[21]	Yanmar
[6]	Scania EMS		[14]	Deutz EMR3		[22]	Daimler Chrysler
[7]	Scania EMS2		[15]	Detroit Diesel		[23]	Not used
[8]	John Deere		[16]	Iveco Cursor		[24]	Not used

(^) **[CONVENTIONAL]:** the Be124 disables all circuits and software of the Can bus port. You are required to configure properly the analogue and digital inputs in a way to protect the engine. To display Oil Pressure, Coolant Temperature and Fuel Level, you are required to program at least an alarm on the settings (see sections 11.4 & 11.6). If you program all alarms to 'OFF', the Be124 will automatically configure the inputs as digital and the display will not indicate a measurement

11.3 - GENERATOR PARAMETERS

See section 11.0 to select this menu. Use **[↑]** or **[↓]** to select a parameter. Push **[→]** to enter the numerical field. Push **[↑]** or **[↓]** to set a value. Push **[←]** to return to the parameter list.

Generator Parameters	Notes	Generator Parameters	Notes
Section 11.3.1 **UNDER VOLTAGE** **320 VAC** **BYPASS DELAY** **6 sec** (limits 60-990V /1-15secs)	These parameters define operating limits for the generator voltage & frequency. If a parameter falls below a limit, the Be124 triggers the alarm and opens the **GCB**. The engine will stop after a cooling down time (see 11.4.6). During **[BYPASS DELAY]** ,Be124 ignores the alarm. Under/V & Under/Hz work only when GCB is closed. *In 3-Phase mode,the Be124 monitors voltages Phase to Phase. In Signle Phase mode the Be124 monitors VL1 to Neutral.*	Section 11.3.2 **OVER VOLTAGE** **500 VAC** **BYPASS DELAY** **6 sec** (60-990V /1-15secs)	These parameters define operating limits for the generator voltage & frequency. If a parameter rises above the limit, the Be124 triggers the alarm and opens the **GCB**. The engine will stop immediately. *In 3-Phase mode,the Be124 monitors voltages Phase to Phase.* *In Signle Phase mode the Be124 monitors VL1 to Neutral.* **[BYPASS DELAY]** allows Be124 to ignore the alarm for a programmable time.
Section 11.3.3 **UNDER HZ** **47.0 Hz** **BYPASS DELAY** **6 sec** (20.0-599.9Hz /1-15secs)		Section 11.3.4 **OVER HZ** **53.0 Hz** **BYPASS DELAY** **6 sec** (20.0-599.9 Hz /1-15secs)	
Section 11.3.5 **WARNING CURRENT** **OFF** **BYPASS DELAY** **6 sec** (1-2000A /1s-15mins)	These parameters define operating limits for the generator current. If the current rises above a limit, the Be124 triggers the alarm and opens the **GCB**. **WARNING CURRENT** provides a pre-alarm only, but **SHORT CIRCUIT** will shut down the engine after cooling down the generator (see 11.4.6). **[BYPASS DELAY]** allows Be124 to ignore the alarm for a programmable time.	Section 11.3.6 **OVER CURRENT** **OFF** **BYPASS DELAY** **6**sec (1-2000A /1s-15mins)	If the current rises above the limit for over the **[BYPASS DELAY]** time, the Be124 triggers the alarm, opens the **GCB** and stop the engine after cooling the generator.
Section 11.3.7 **SHORT CIRCUIT** **OFF** **BYPASS DELAY** **0.5 sec** (1-2000A /0.0s-15secs)		Section 11.3.8 **ALTERNATOR FAIL** **OFF** **PHASE MODE** **3 PHASE** **[PHASE MODE]** options: **[1]=** single Phase Mode **[3]=** 3Phase Mode **[3+CW]=** 3Ph. Clock Wise **[3+CCW]=** 3Ph. Counter Clock Wise **If you set CW or CCW the engine will stop in case of wrong phase sequence. The display indicates the sequence (see 6.02)**	**[ALTERNATOR FAIL]** The Be124 shutdowns the engine if Vac (or Hz) is outside of the operating range for over 150 seconds (*). This alarm works only in 'AUTO' or 'TEST' mode of operation. (*)The 150 seconds timer starts to count when you start the engine.
Section 11.3.9 **KVA SHUTDOWN** **OFF** **BYPASS DELAY** **30 sec** (10 -1500kVA 1s/59 mins)	If the Total Power rises above the **[KVA SHUTDOWN]** limit for over the **[BYPASS DELAY]** time, the Be124 opens the contactor and shuts down the engine after cooling the generator (see 11.4.6).		
Section 11.3.10 **REVERSE POWER** **OFF** **BYPASS DELAY** **1 sec** (10-1500kW 1-15 secs)	If the active power of one phase becomes negative and exceeds the limit for over the **[BYPASS DELAY]** time, the Be124 opens the **GCB** and shutdowns the engine after cooling the generator.	Section 11.3.11 **PHASE UNBALANCE** **OFF** **BYPASS DELAY** **15 sec** (10-990V /1-59 secs)	If the difference of voltage between phases rises above the setting for over **[BYPASS DELAY]** seconds, the Be124 opens the **GCB** and shutdowns the engine immediately.
Section 11.3.12 **EARTH FAULT** **OFF** **BYPASS DELAY** **1.0 sec** (0.1-200.0A /0.3s-10.0sec)	Provides Earth Fault Protection. The engine stops immediately. (During **[BYPASS DELAY]**, the Be124 ignores the alarm).	Section 11.3.13 **CT SIZE L1 L2 L3** **500** **CT SIZE EARTH** **0** (5-2000A / 5A)	It defines the size of the CTs for the phases L1-2-3 of the generator and the size of the CT for earth current monitoring. (CT size Earth Fault below 100/5 will provide 0.01A resolution)

11.4 - ENGINE PARAMETERS

See section 11.0 to enter this menu. Use **[↑]** or **[↓]** to select a parameter. Push **[→]** to enter the numerical field. Push **[↑]** or **[↓]** to set a value. Push **[←]** to return to the parameter list.

Engine Parameters	Notes	Engine Parameters	Notes
Section 11.4.1 **PRE-LUBE TIME** **1 sec** **CRANK TIME** **5 sec** (limits 1-15 seconds)	It energizes the Pre-lube pump (option [14] table 11.9). It could be used to delay the crank if necessary. **CRANK TIME** limits the coupling time of the starter motor.	Section 11.4.2 **CRANK REST TIME** **5 sec** **START ATTEMPTS** **3** (3-15 secs /3-15 att.)	These parameters define the start sequence of the engine: rest time and maximum number of attempts.
Section 11.4.3 **CRANK VDC** **8.0 VDC** **CRANK VAC** **100 AC** (3-30VDC /60-990VAC)	The Be124 terminates the crank when voltage of the charger alternator or voltage of the generator rises above the setting. The option **OFF** disable the monitoring.	Section 11.4.4 **CRANK HZ** **40.0 Hz** **CRANK RPM** **OFF** (20.0-599.9 /100-800)	The Be124 terminates the crank when frequency or speed of the engine rises above the setting. The option **OFF** disable the monitoring. The **CRANK RPM** setting enables the PICK-UP failure alarm.
Section 11.4.5 **PREGLOW TIME** **OFF** **PREGLOW MODE** **1** (1sec-15mins)	Choose (figure 11.4) the proper working logic for Pre-glow. Option [12] is provided to drive the pre-glow relay by a configurable output as indicated in table 11.9.	Section 11.4.6 **WARM UP TIME** **15 sec** **COOLING TIME** **15 sec** (limits 0-15mins)	The Generator Circuit Breaker (GCB) will automatically close after **[WARM UP TIME]**. **[COOLING TIME]**: the Engine will automatically stop after set cooling time.
Section 11.4.7 **GAS PURGE** **1 sec** **STOP SOLENOID** **2 sec** (1-15sec /1s-15mins)	**[GAS PURGE]** allows you the use of gas-fuelled engine (see option [11] on table 11.9). **[STOP SOLENOID]:** you are requested to program an output with option [23] (see table 11.9).	Section 11.4.8 **BELT BREAK** **8.0 VDC** **FAIL TO STOP** **OFF** (limits 3.0-30.0Vdc)	Setting to detect a belt break condition. The option OFF disables the alarm. **[FAIL TO STOP]:** option ON triggers the alarm in case Be124 fails to stop the engine.
Section 11.4.9 **ALARMS BYPASS** **10 sec** **HIGH COOLANT SD** **OFF** (2-99 secs / 1-250°C)	The **[ALARM BYPASS]** timer allows Be124 to ignore the Oil Pressure /Temperature & Configurable Input alarms (see 11.8). **[HIGH COOLANT SD]** The engine stops if temperature rises above the limit.	Section 11.4.10 **HIGH COOLANT WRN** **OFF** **LOW COOLANT WRN** **OFF** (limits 1-250 °C)	Engine (coolant) Temperature. You can set a Low / High limit (source: Canbus or analog input JC6). **note (*)**
Section 11.4.11 **LOW BAR WARNING** **OFF** **LOW BAR SHUTDOWN** **OFF** (limits 0.1-20.0 Bar)	You can set a Low Oil Pressure warning and/or shutdown. If you use a Pressure Switch, program the parameters to [OFF]. **note (*)**	Section 11.4.12 **HIGH OIL °C WRN** **OFF** **HIGH OIL °C SD** **OFF** (Limits 1-250 °C)	Oil Temperature settings. The measurement must be provided by Canbus.
Section 11.4.13 **HIGH AUX °C WRN** **OFF** **HIGH AUX °C SD** **OFF** (limits 1-250°C)	You can monitor an Auxiliary Temperature by setting a warning and/or a shutdown. You are required to connect a sensor to terminal JC6 (supposing that is not used for the Coolant Temperature). **note (*)**	**note (*)** the alarm is ignored during **[ALARMS BYPASS]** (see 11.4.9). If you use an ECU, the Be124 will pickup the measurements from Canbus. If a non-ECU engine is used, you can connect a sensor to inputs JC6 & JC7 (see 27.0). If the sensors are are not available, set the alarms to [OFF] in a way to enable the digital mode (you can connect a Pressure/Temperature switch to protect the engine).	

Figure 11.4: Pre-glow modes timing diagram

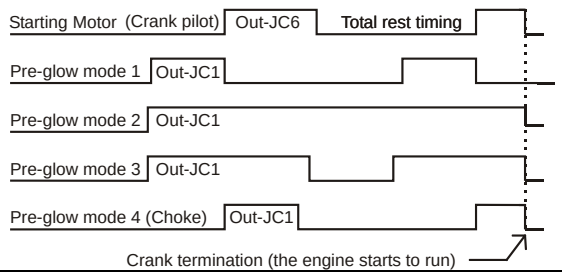

11.5 - SPEED PARAMETERS

See section 11.0 to enter this menu. Use **[↑]** or **[↓]** to select a parameter. Push **[→]** to enter the numerical field. Push **[↑]** or **[↓]** to set a value. Push **[←]** to return to the parameter list.

Speed Parameters	Notes	Speed Parameters	Notes
Section 11.5.1 **UNDER SPEED** **OFF** **BYPASS DELAY** **6 sec** (100-4000 /1-15 secs)	Operating low-limit for the engine speed. This protection is only enabled in 'AUTO' mode of operation. The engine will stop after a cooling down time.	Section 11.5.2 **OVER SPEED** **OFF** **BYPASS DELAY** **1 sec** (100-4000/1-15 secs)	Operating high-limit for the engine speed. This protection works in all modes of operation. The engine will stop immediately.
Section 11.5.3 **DROOP SETTING %** **OFF** **NUMBER OF POLES** **4** (0.1-10.0% / 2-32 Poles)	The 'droop' setting for parallel applications. Set the **[NUMBER OF POLES]** of the alternator if Pickup or Canbus is not available. It allows you to read the speed of the engine.	Section 11.5.4 **IDLE TIME** **OFF** **IDLE SPEED** **OFF** (100-4000 /1-59mins)	In 'AUTO' mode, the engine runs at **[IDLE SPEED]** then, after the **[IDLE TIME],** it will reach the nominal speed. During **[IDLE TIME]** the Be124 activates an output if with option [16] is used.
Section 11.5.5 **NOMINAL SPEED** **1500** **PICKUP / W RATIO** **OFF** (100-4000 / 10.0-500.0)	**NOMINAL SPEED** is a mandatory setting when you connect Be124 to an ECU. If the ECU is not available, you can set a **PICKUP / W RATIO** and connect a pick-up or the 'W' terminal of the engine charger alternator. The 'ratio' has a range of 10.0 up to 500.0. By setting a ratio, Be124 will enable the PICK-UP failure monitoring. If the Canbus, Pickup (or 'W') is not available we recommend that you set the number of poles of the alternator (see 11.5.3). In this way you can read the RPM calculated from the frequency of the generator.		

11.6 - FUEL PARAMETERS

See section 11.0 to enter this menu. Use **[↑]** or **[↓]** to select a parameter. Push **[→]** to enter the numerical field. Push **[↑]** or **[↓]** to set a value. Push **[←]** to return to the parameter list.

Fuel Parameters	Notes	Fuel Parameters	Notes
Section 11.6.1 **TANK EMPTY LEVEL** **OFF** **TANK EMPTY DELAY** **OFF** (1-99% /15s-59mins-OFF)	The engine shuts down if the level drops below the **[TANK EMPTY LEVEL]** limit or over the **[TANK EMPTY DELAY]** time. Be124 monitors a sensor or switch connected to input JC-5 (note 1). Set to 'OFF' to disable the shutdown; it will trigger a FUEL RESERVE warning only.	Section 11.6.3 **TANK PUMP START** **OFF** **TANK PUMP STOP** **OFF** (limits 1-99%)	Program an output with option [13] (table 11.9) to drive a pump to fill the tank. A delay of 15 seconds for the start and stop of the pump is provided. The Be124 disables the pump if the **[TANK FILL TIME]** time is exceeded. An timeout alarm is also provided. The pump is disabled when you turn the key to OFF.
Section 11.6.2 **LOW FUEL WARNING** **OFF** **HIGH FUEL WRN** **OFF** (limits 1-99%)	Be124 monitors the fuel level providing a warning, by programming at least one limit, you enable the JC-5 to work with a sensor (see note 1) and you will obtain a reading on the display.	Section 11.6.4 **TANK FILL TIME** **OFF** (15s-59mins-OFF)	

(Note 1) If a fuel sensor is not available, you can connect a 'Fuel Level Switch' to Input JC-5; you have to ensure the OFF settings are enabled on **[TANK EMPTY LEVEL], [LOW FUEL WARNING] & [HIGH FUEL WRN]** in a way to configure the input in 'digital' mode. In addition to a level monitoring via 'Resistive Sensor' connected to JC-5, you can configure one programmable input (JC10-9-8) with option **[10]** (see 11.8) and connect a 'Fuel Level Switch'. The timer **[TANK EMPTY DELAY]** starts to count when the 'Fuel Level Switch' closes its contacts. The engine shuts down when the timer expires. If you set the **[TANK EMPTY DELAY]** into **[OFF]** mode, the Be124 generates only a warning. The section 23.6 provides additional information about the Fuel Level alarms.

11.7 - HOURS RUN & HORN SETTINGS

(See section 11.0 for setting up the menu)

Hour Counter & Horn Timeout	Notes
HOUR COUNTER SET **0** **HORN TIMEOUT** **20 sec** (limit 0-65534h) (limits 5sec-59mins)	You can preset the **[HOUR COUNTER]** (up to 65.534h) overwriting the old value. To cancel the counter, enter **[0]**. It does not affect the hour run counter provided by **ECU**. See section 5.03 to display status of the hour counter and section 5.13 to display the 'Hour Count' provided by ECU. **[HORN TIMEOUT]** In case of alarm, the Common Audible Alarm output (JF-6) will automatically shutdown after a time out. Program the option **[OFF]** to disable the timeout; in this case the only way to silence the horn, is via the **[ACK]** pushbutton.

11.8 - GENERATOR CONTROLLER CONFIGURABLE DIGITAL INPUTS

To enter this menu, see section 11.0. Use **[↑]** or **[↓]** to select a parameter. Push **[→]** to enter the numerical field. Push **[↑]** or **[↓]** to set a value. Push **[←]** to return to the parameter list.

Configurable Input 1 (JC-10)	Configurable Input 2 (JC-9)	Configurable Input 3 (JC-8)
INPUT 1 OPTION 1 INPUT 1 CONTACT N.O.	INPUT 2 OPTION 12 INPUT 2 CONTACT N.O.	INPUT 3 OPTION 13 INPUT 3 CONTACT N.O.
For each input you can choose an option (see the table 11.8) and contact can be either Normally Open or Closed. Normally Open means that the functions triggers when you close the switch. Normally Closed means that the function triggers when you open the switch. Factory programming is 'Normally Open'.		

Table 11.8 - List of options for CONFIGURABLE DIGITAL INPUTS

Option	Description	Option	Description
[0]	It disables the input. The Be124 will totally ignore the input.	**[7]**	Remote **LOCK**. It disables the generator and stops the engine. The Be124 indicates the alarm REMOTE LOCK (see 23.2). When you turn off the switch (if a N.O. contact is used), the engine may start automatically and Be124 will automatically clear the alarm.
[1]	It stops the engine immediately and the display will indicate a SHUTDOWN alarm (see 23.2)	**[8]**	Oil Pressure Switch option (program option N.C. if you use a Pressure Switch that closes the contacts in case of Low Oil Pressure). The Be124 will shut down the engine in case of low oil pressure (see 23.7). The alarm is ignored during the Alarms Bypass time. This option can be used if the JC-7 input is already used in analog mode (for sensor) and you need extra-protection by using a pressure switch connected to a digital input.
[2]	It shutdowns the engine but the Be124 ignores the input during the Alarms Bypass Timing (See 11.4.9 to program the Alarms Bypass Time). The display will indicate a SHUTDOWN alarm (see 23.2)	**[9]**	Coolant Temperature Switch option (program option N.O. if the temperature switch closes the contacts in case of high temperature). The Be124 will shut down the engine (see 23.5). The alarm is ignored during Alarms Bypass time. This option can be used if the JC-6 input is already used in analog mode (for sensor) and you need extra-protection by using a temperature switch connected to a digital input.
[3]	It stops the engine after a Cooling Down time (see 11.4.6). The display will indicate a SHUTDOWN alarm (see 23.2).	**[10]**	Fuel Level Switch option (program option N.O. if level switch closes the contacts in case of low fuel). The Be124 will shut down the engine after the TANK EMPTY DELAY time-out (see 11.6.1). In case you set the timer in OFF mode, the Be124 will provide a warning only. Use this option if the JC-5 input is already used in analog mode (for sensor) and you need extra-protection by using a level switch connected on a digital input.
[4]	Be124 ignores the input during the Alarms Bypass and will stop the engine after a Cooling Time. The display will indicate a SHUTDOWN alarm (see 23.2)	**[11]**	Idle Speed option (it holds the engine at IDLE speed). If the engine is running at nominal speed, the Be124 will open the GCB and orders the governor to run at IDLE speed. Vice versa. Be124 will run the engine at nominal speed and will close the GCB.
[5]	Warning Input Mode. The display will indicate a WARNING alarm (see section 23.2). The engine will continue to run,	**[12]** Note(1)	Remote Engine Start. Be124 monitors the input only in 'AUTO' mode (see 2.4). If you program option N.O., the engine will start when you connect the input to battery minus. Be124 stops the engine when you open the switch. Program the option N.C. if you want to reverse the logic.
[6]	As above but the Be124 ignores the input during the Alarms Bypass Timing (See 11.4.9).	**[13]** Note(1)	Remote Genset Start (It starts the engine and enables the GCB). Be124 monitors the input only in AUTO mode (see 2.4). If you program option N.O., the engine will start when you connect the input to battery minus. Be124 opens the GCB and stops the engine when you open the switch. Program the option N.C. if you want to reverse the logic.

Note(1) To limit the running time you can set the parameter [RUN TIMEOUT] (see10.3). Once the timer expires, the Be124 will shutdown the engine. You have to turn the key to 'OFF' position to cancel the alarm.

11.9 - GENERATOR CONTROLLER CONFIGURABLE DIGITAL OUTPUTS

Use [↑] or [↓] to select this menu from the **[OEM PARAMETERS]** (see11.0). Push [→] to enter the menu. Be124 features programmable Output 1 & 2. The following table indicates the factory settings.

Configurable Outputs	Note
OUTPUT 1 OPTION 12 **OUTPUT 2 OPTION 21** (Available options: 1-25)	- Push [→] to enter the option field. - Push [↑] or [↓] to set an option. Push [←] to return to the function. Factory programming is set at option [12] (=Pre-glow) for Output 1 (terminal JF4) Factory programming is set at option [21] (=ECU supply mode) for Output 2 (terminal JF3) See the available options on the table 11.9

Table 11.9 - List of the options for the CONFIGURABLE DIGITAL OUTPUTS

Options & description		Options & description	
[0]	The Output is disabled. The Be124 disables the output.	[13]	Pump to fill the tank. You can connect a relay to drive the Fuel Pump. You can find all details for programming in section 11.6.3-4.
[1]	Common Speed & Frequency alarms. It energizes in case of Under/Over Frequency or Speed.	[14]	Prelube. You can connect a pump to prelubricate the engine before starting (see 11.4.1).
[2]	Common generator alarms. It energizes in case of Under/Over Frequency, Speed and in case of any alarm of the generator (Over Current/ Over/Under Voltage etc..).	[15]	Auto Mode Status. It informs an external equipment that Be124 is working in Auto mode of operation. You can connect a relay or an external lamp.
[3]	Common oil pressure alarms. It energizes in case of any alarm related to the engine oil pressure.	[16]	Idle speed control. You can connect this output (via a relay) to a governor in a way to control the Nominal / Idle speed (see 11.5.4).
[4]	Common temperature alarms. It energizes in case of any alarm related to the engine temperature (Oil / Coolant / aux. etc.).	[17]	Maintenance service required. This output energizes when a timer (1-2-3) expires. You have to carry out the maintenence routine (see 10.1).
[5]	Low / High battery voltage. It energizes in case of battery voltage out of limits: 11.5-15.5 (12 V battery) and 23-31V (24 V battery). To trigger the alarm Be124 needs to detect an abnormal condition for at least 2 minutes.	[18]	Presence of nominal generator parameters (voltages/frequency/phase rotation etc..). Used to interface other controllers or a PLC.
[6]	Common fuel alarms. It energizes in case of any fuel level alarm.	[19]	CANBUS Communication Failure. It energizes in case of communication failure.
[7]	Fail to start / Fail to stop. It energizes in case of starting failure or stopping failure.	[20]	**ECU** Enable 1 (Active when Fuel solenoid and Stop are activated). It could be used to supply the ECU.
[8]	Common of all warnings. It energizes in case of any warning.	[21]	**ECU** enable 2 (Active in MAN, AUTO, TEST modes and during the stop solenoid time). It could be used to supply the ECU.
[9]	Common of all shutdowns. It energizes in case any shutdown.	[22]	**ECU** STOP command. To be used in case the ECU requires a hardware command to stop the engine.
[10]	Common of all warnings and shutdowns. It energizes in case of any warning or shutdown.	[23]	Stop Solenoid output (see 11.4.7). Used in case you require an energized to stop solenoid.
[11]	Purge (gas engine valve control). You are required to connect a driver relay for the GAS valve. See section 11.4.7 for programming.	[24]	Engine Running Status.
[12]	Preglow output. You are required to connect a driver realy for preglow. See section 11.4.5 for programming.	[25]	Auto Start. It energize when battery drops under the LOW BATT START setting. It will remain active until engine stops (see 10.4).

11.10 - GENERATOR CONTROLLER CONFIGURABLE SENSORS

By using [↑] or [↓], select the item you need **[T SENSOR...FUEL SENSOR...]** from the **[OEM PARAMETERS]** list (see11.1). Push [→] to enter the item. Use [→] [↑] [↓] to select and modify the parameter you need. Push [←] to return. The following table indicates the factory settings.

Temperature Sensor	Fuel Level Sensor	Oil Pressure Sensor	Notes
POINT 1 DEGREE 128°C POINT 1 OHM 19 OHM	POINT 1 LEVEL 0% POINT 1 OHM 10 OHM	POINT 1 BAR 0.0 BAR POINT 1 OHM 10 OHM	**Temperature Sensor Response Curve** You can edit 6 points for Temperature (0-250°C) and resistance (0-1000 OHM). Factory programming complies with VDO sensor. Temperature Sensor must be connected to JC-6. To enable the sensor you are required to program al least Low or High Coolant alarm (does not matter if warning or shutdown): see section 11.4.9 &10. If you set all temperature alarms to OFF, the Be124 will consider the input JC-6 as digital. In this case you are requested to connect a Temperature Switch to protect the engine (see 27.0 & 28.0). **Oil Pressure Sensor Response Curve** You can edit 6 points for Pressure (0-250°C) and resistance (0-1000 OHM). Factory programming complies with VDO sensor. Oil Pressure Sensor must be connected to JC-7. To enable the sensor mode you are required to program an alarm of Low Oil Pressure alarm (does not matter if warning or shutdown). See section 11.4. If you set all Oil Alarms parameters to OFF setting, the Be124 will consider the input JC-7 as digital. In this case you are requested to connect a Pressure Switch to protect the engine (see 27.0 & 28.0). **Fuel Level Sensor Response Curve** You can edit 6 points for Fuel Level (0-99%) and resistance (0-1000 OHM). Factory programming complies with VDO sensor. Fuel Level Sensor must be connected to JC-5. To enable the sensor mode you are required to program a setting of Low or High level fuel (see 11.6). If you set all Level Alarm parameters to OFF, the Be124 will consider the input JC-5 as digital. In this case you are requested to connect a Level Switch to provide a Low Fuel alarm (see 27.0 & 28.0).
POINT 2 DEGREE 115°C POINT 2 OHM 26 OHM	POINT 2 LEVEL 0% POINT 2 OHM 10 OHM	POINT 2 BAR 2.0 BAR POINT 2 OHM 51 OHM	
POINT 3 DEGREE 90°C POINT 3 OHM 46 OHM	POINT 3 LEVEL 0% POINT 3 OHM 10 OHM	POINT 3 BAR 4.0 BAR POINT 3 OHM 86 OHM	
POINT 4 DEGREE 80°C POINT 4 OHM 67 OHM	POINT 4 LEVEL 0% POINT 4 OHM 10 OHM	POINT 4 BAR 6.0 BAR POINT 4 OHM 122 OHM	
POINT 5 DEGREE 70°C POINT 5 OHM 95 OHM	POINT 5 LEVEL 50% POINT 5 OHM 95 OHM	POINT 5 BAR 8.0 BAR POINT 5 OHM 152 OHM	
POINT 6 DEGREE 40°C POINT 6 OHM 287 OHM	POINT 6 LEVEL 99% POINT 6 OHM 180 OHM	POINT 6 BAR 10.0 BAR POINT 6 OHM 180 OHM	

Important note: Be124 monitors the above sensors into 'analog mode' if you set at least one alarm (see sections 11.4 & 11.6). If you program all alarms to 'OFF', the Be124 considers the input as digital (switch input). The display will not provide a measurement. In OFF mode of operation, the sensors are disabled after 5 minutes to reduce current supply to the Be124.

11.11 - GENERATOR CONTROLLER RESTORE DEFAULT

This command allows you to restore the factory settings. Select **[OEM PARAMETERS]** then **[MODIFY PARAMETERS]** menu. Repeatedly push [↓] until you select the **[RESTORE DEFAULTS]** item. Push **[→]** to enter. Follow the instructions:

Display	Instructions for restoring the factory settings (Defaults)
RESTORE DEFAULTS **HOLD** **5sec** **[←]** **EXIT** **RESTORE DEFAULTS** **DONE**	A) - Push **[ACK]** pushbutton for at least 5 seconds to restore the factory programming; a count down will appear on display before triggering the operation. B) - You can quit the procedure at anytime by pushing **[←]** (you exit the function). C) - After writing the factory settings, the display confirms the operation via the message **[RESTORE DEFAULTS DONE]**. ***Note: we recommend that you remove the supply for a few seconds. After reconnecting the supply check the parameters; a programming of some parameters may be required according to your generator (see section 22.0).***

Section 12.0 - GENERATOR CONTROLLER RESET AND CLEAR

Select the function **[RESET AND CLEAR]** from the **Main Menu** (see section 4.0). Push **[→]** to enter the menu. It contains the following functions.

Display	Instructions
CLEAR ALL MEMORY **CLEAR ALL EVENTS** **CLEAR KWH COUNT** **CLEAR NR STARTS** **CLEAR .....** **HOLD ACK** **5 sec** **[←]** **EXIT** **ACK**	A) - Choose the function you need by using **[↑]** or **[↓]** and push **[→]** to enter; the screen that indicates the available options will appear. B) - Push and hold the **[ACK]** button for 5 seconds to trigger the function. You can interrupt the operation at anytime. Just before the 5 seconds timer expires, push **[←]** to quit. C) - After clearing, the display confirms the operation with a message (example **[CLEAR EVENTS DONE]**. *Description of the functions* **CLEAR ALL MEMORY:** it restores the Factory Settings (OEM & USER), it clears Events, Energy counter & Logger, Data Logger & Number of Starts (except hour-counter & date of production). **CLEAR EVENTS:** it cancels only the memory of the Events. **CLEAR ENERGY:** it clears the Energy Counter only. **CLEAR NR STARTS:** it clears the number of starts counter. Note: to clear the HOUR COUNTER see section 11.7.

Section 13.0 - GENERATOR CONTROLLER USER & OEM PASSWORD

To access this menu turn the key to 'OFF' then push **[←]** until **[ENGINE METERING]** appears on the top of the display (Main Menu). Repeatedly push **[↓]** to select **[USER PASSWORD]** (or **[OEM PASSWORD]**). Push **[→]** to enter the Menu.

Display	Instructions for OEM & USER passwords
PASSWORD **CLEAR PASSWORD**	The display will present the option **[PASSWORD]** (to insert a new password) and **[CLEAR PASSWORD]** (to cancel a previous password). Use **[↑]** or **[↓]** to select a function and push [→] to enter the function.
INSERT PASSWORD **BACK - * * * OK** **[←] [→]**	Insert a password a) Use **[↑]** and **[↓]** to choose a number in between 0 to 9 on the first digit (left). b) Push **[→]** to move right to the second digit from the left. c) Repeat step a) and step b) until you program the all 4 digits. d) Push **[→]** to confirm the password. e) By now on, programming will be password protected. Note that using the OEM password you are not authorized to access the USER parameters (and vice versa).
CLEAR PASSWORD **HOLD** **5 sec** **[←]** **EXIT**	Remove (clear) a password a) To clear a password you are required to type the password first. b) The display indicates the available options: EXIT (**[←]**) or CLEAR (**[ACK]**) c) Push and hold the **[ACK]** button continuously for at least 5 seconds. d) The display will indicate the message **[CLEAR PASSWORD DONE]**. e) By now on, you will no longer need a password to program the Be124.

Section 13.1 - Recovering a lost or forgotten PASSWORD

In case you inadvertently loose the password, you can contact Bernini Design. You will be asked for some details & key information. Bernini Design will provide an 'alternative' password in order that you can retrieve your password. Once in the system you can change your password (User or/and OEM)

Section 14.0 - GENERATOR CONTROLLER DATA LOGGER TRANSIENT RECORDER

Push **[ACK]** to display the Be124 Status Page. Push **[←]** to open the **Main Menu**. Repeatedly push **[↓]** to select **[DATA LOGGER]**. Push **[→]** to display the list of the **[DATA LOGGER]** functions.

Display	Instructions (visit www.bernini-design.com for the most recent updates)
FUNCTION TO LOG **BATTERY V** **SAMPLING RATE** **AUTO** **LOW LIMIT** **6.0VDC** **HIGH LIMIT** **16.0VDC** **MIN** **7.4** **VDC** **14.4** The display provides Min./Max. & Avg measurements. The last recorded value before stopping the logger is indicated on the bottom.	**A) -** Push **[→]** to enter the **[FUNCTION TO LOG]** option field (default is **BATTERY V**) . **B) -** Use **[↑]** and **[↓]** to choose a measurement from the list (Battery V, Charger Alternator V, Speed RPM, Fuel %, Auxiliary °C, Coolant °C, Oil Bar, Frequency, Power KVA, VL1, C1 etc...). Once selected, push **[←]** to confirm and return to list. **C) -** Push **[↓]** to select the **[SAMPLING RATE]**. Use **[↑]** and **[↓]** to choose [AUTO], 200ms, 500ms, 1s ....1h...or day. Push **[←]** to confirm. The Be124 will draw a line according to the Sampling Rate. Use option **[AUTO]** to enables the Transient Recorder Mode. The Be124 will automatically set the Sampling Rate and will synchronize the Data Logger with the start of the engine. Once selected, push **[←]** to confirm and return to list. **D) -** Push **[↓]** to set the **LOW LIMIT** of the scale and push **[→]** to enter. Use **[↑]** and **[↓]** to change the value. When you choose a function, the Be124 uses a factory setting but you can change it at anytime. For example, if you use a 24V battery, you can set the limit to 18.0V instead of 6.0 (see the example on the left). Push **[←]** to confirm the setting. Once selected, push **[←]** to return to list. **E) -** Push **[↓]** to select the **HIGH LIMIT** of the scale and push **[→]** to enter. Use **[↑]** and **[↓]** to change the upper limit. When you choose a function, the Be124 uses a factory setting (16.0 V) but you can change the limit at anytime. If you use a 24V battery, for example, you can set the limit to 32V. Push **[←]** to confirm. **F) -** Finally push **[↓]** to open the data logger page. The data logger can draw 60 lines. On the left there you can see an example of battery monitoring during cranking (AUTO mode).

Functions of the push-buttons.

Push **[↓]** to start and stop the data logger. When you push stop, the Be124 stores the log of data into memory (*)
Push and hold **[→]** for at least 3 seconds to cancel the screen; a prompt will warn you about this operation.
Push **[↑]** to return back to data logger settings; you can change the settings at anytime (sampling rate, scale, etc.).
Push **[←]** to exit. The data logger will continue to run in background.
(*): this pushbutton is ignored when using the AUTO Sampling Mode.

Example of Auxiliary Temperature logging

(Sampling rate 1min / Limits 20°C - 70°)

The display prints a line every minute. The screen can record the variation of the temperature of one hour (60 lines = 1 h). The data logger works in background even if you exit the screen. The display toggles, with a rate of about one second, the indications of the MIN (minimum), MAX (maximum) and AVG (average) recorded temperatures. The data logger is free running and, on the bottom, appears a new line every minute with the indication of latest temperature sample. If you set the sampling rate to one day, the Be124 draws a line every 24 hours. You will record the temperature for a total of 60 days.

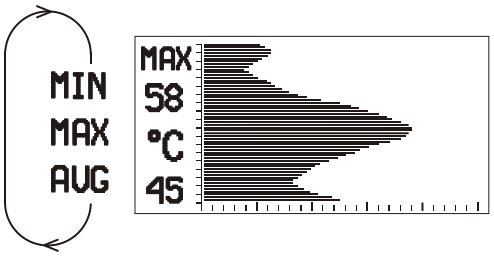

Example of Speed Transient Recorder

(Sampling: AUTO / Limits: 1100 RPM - 1600 RPM)

The display prints a line every 200ms for a total record of about 12 seconds . The data logger starts when engine starts to run. The data logger stops automatically after drawing about 50 lines. In this way you can capture the variation of the speed after starting the engine. The display indicates the MIN (minimum), MAX (maximum) speed and the latest recorded measurement.

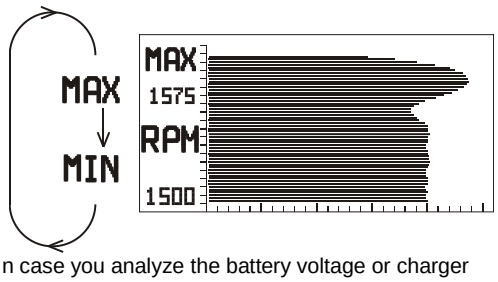

Note In case you analyze the battery voltage or charger alternator voltage, the data logger will start recording when you start the engine and will stop as soon as engine is running. In this way you can observe voltage variations during cracking.

Section 15.0 - GENERATOR CONTROLLER OSCILLOSCOPE

Push **[ACK]** to display the 'Be124 Status' page. Push **[←]** to open the Main Menu: **[ENGINE METERING]** will appear on the top of the display. Repeatedly push **[↓]** to select **[OSCILLOSCOPE]**. Push **[→]** to activate the oscilloscope.

Oscilloscope Instructions
Push **[↓]** or **[↑]** to select AUTO, POSITIVE or NEGATIVE mode. Push **[→]** or **[←]** to select a measurement (VL1-N, C1, VL2-N, C2, VL3-N, C3 or Earth Current) Repeatedly push **[←]** to return to the Main Menu. Push **[ACK]** to exit and open the 'Be124 Status' page.

The oscilloscope embedded into Be124 is able to analyze the waveform of the voltages and currents. True RMS voltages, currents and frequency measurements are indicated on the top of the display also.

The BE124, by means of software, provides automatic setup in a way to optimize the display of the waveform (auto trigger, auto range etc.).

In case you want to see details about the peaks of the waveforms, you can use the buttons **[↓][↑]** to display the positive peaks or negative peaks (POS= positive and NEG=negative). The Be124 will optimize the resolution automatically.

When you start the oscilloscope, internal setting is 'AUTO' (both positive and negative on the same screen). But you can change the display mode at anytime.
On the right side you see examples of display for voltage VL1 to Neutral.

Note: over a frequency of about 150 Hz the LCD changes the presentation of the waveform. In this way, the measurements displayed will allow you to better analyze the stability of the parameters. See the example below (400 Hz Voltage).

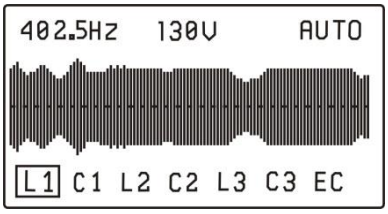

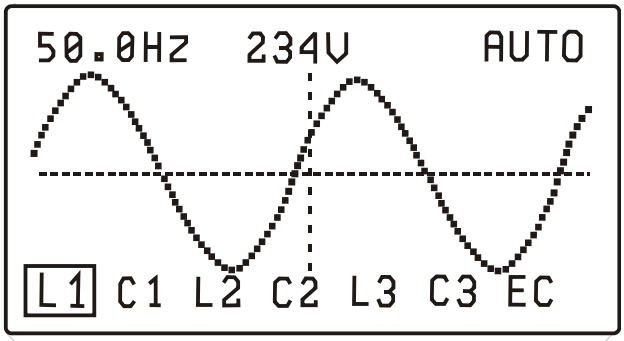

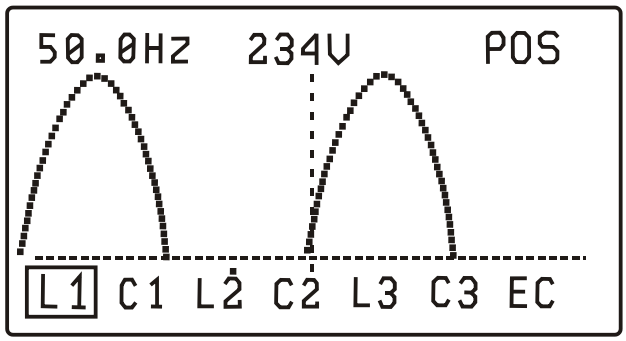

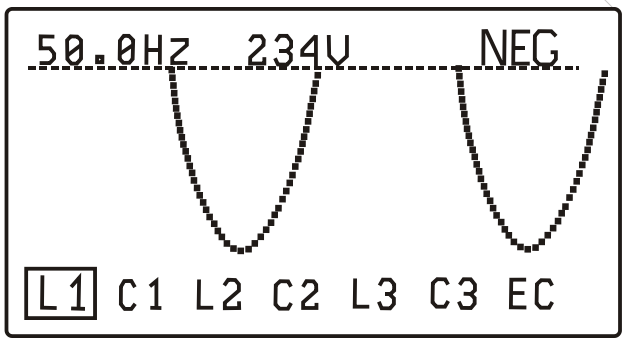

Section 16.0 - GENERATOR CONTROLLER PUSH-BUTTONS TEST

This procedure should be carried out by qualified personnel only; engine may start.

Display	Instructions (to enter this menu, read the procedure on the top of section 4.0)
PUSHBUTTONS TEST **KEY OFF (START)** **GCB OFF (ACK)** **AUTO OFF [↓][↑][→]** By pushing a button you will only trigger a message on the display. You will only test the push buttons efficiency.	Turn the key to 'OFF' position. This function allows you to test the push-buttons on the front panel. a) Push the **[GCB]** button; the display should indicate the message **[GCB ON]**. b) Push the **[AUTO]** button; the display should indicate the message **[AUTO ON]**. c) Push the **[ACK]** button; the display should indicate the message (**[ACK]**). d) Turn the key to 'ON' position; the display should indicate the message **[KEY ON]**. e) Turn the key to START' position; the display should indicate the message (**[START]**). f) Push one of the **[↓][↑][→]** push-buttons; the display should indicate the proper message. Push the **[←]** button at anytime to exit the test. If a button fails to provide you with feedback, the controller is damaged and should be returned for repair to Bernini Design.

Section 17.0 - SWITCHES TEST (DIGITAL INPUTS TEST)

Display	Instructions (to enter this menu, read the procedure on the top of section 4.0)
SWITCHES TEST **JC10 IN.1 OPEN** **JC9 IN.2 OPEN** **JC8 IN.3 OPEN** **SWITCHES TEST** **JC7 OIL OPEN** **JC6 °C OPEN** **JC5 FUEL OPEN**	Turn the key to 'OFF'. This function allows you to test all configurable digital inputs. a) Connect to battery minus, the terminal JC-10: the display indicates the message **[CLOSED]**. b) Connect to battery minus, the terminal JC-9: the display indicates the message **[CLOSED]**. c) Connect to battery minus, the terminal JC-8: the display indicates the message **[CLOSED]**. d) Proceed in the same way to test the rest of the inputs (supposing configured as digital). e) Push the **[←]** button at anytime to exit the test. You can run this test on site and the display will indicate the status of the inputs. There is the possibility, in case the inputs are connected, that you find a message **[CLOSED]** on one or more inputs. If you connect a resistor lower that 500 OHM you can get the message **[CLOSED].**

Section 18.0 - SENSORS TEST (ANALOGUE INPUTS)

Display	Instructions (to enter this menu, read the procedure on the top of section 4.0)
SENSORS TEST **JC7 OIL 2500 ohm** **JC6 °C 2500 ohm** **JC5 FUEL 2500 ohm** Note: 2500 ohm is the indication when input is 'open' (Full Scale).	Turn the key to 'OFF'. This function allows you to test the analogue inputs. We recommend that you use a resistor of a known value in the range 100 - 500 OHM (+/-1%). It is mandatory that you connect JC-4 (ground compensation) to the battery minus. a) Connect the resistor to battery minus and terminal JC-7 (Oil Pressure analog input). b) Connect the resistor to battery minus and terminal JC-6 (Oil Temperature analog input). c) Connect the resistor to battery minus and terminal JC-5 (Fuel Level analog input). Each time you connect the resistor, the display should indicate a proper value (+/-3%). If Be124 fails to indicate the expected value, you have to return the Be124 to Bernini Design for service. By running this test on site you can read the value in OHM of the sensors that are connected to the Be124. If you fail to connect the ground compensation the Be124 will indicate a warning message.

Section 19.0 - OUTPUTS TEST (DIGITAL OUTPUTS)

Display	Instructions (to enter this menu, read the procedure on the top of section 4.0)
OUTPUTS TEST [↓] **JF4 OUT1 (§) [→] OFF** **JF3 OUT2 (§) OFF** **JF8 FUEL (*) OFF** **OUTPUT TEST [↓]** **JF7 START (*) OFF** **JF5 GCB (*) OFF** **JF6 HORN (*) OFF**	Turn the key to 'OFF' position. To test the digital outputs you can use a 2-3W lamp or the relays already connected to the Be124. a) Connect the lamp to battery minus and terminal JF4. Push the **[↓]** button to select **[JF4 OUT1]**. When the cursor points to the message **[OFF]** push the **[→]** button; the message turns to **[ON]** and the lamp should light. (see next page) (*) (see next page) (see instructions on the previous page) b) Push the **[↓]** button to select another output. Use the same procedure described above. Connect the lamp to the proper terminal to carry out a test. c) Push the **[←]** button at anytime to exit the test. If an output fails to work, you have to return the Be124 to Bernini Design for service. **(*) NOTE!!! TO ACTIVATE THIS OUTPUT TURN THE KEY SWITCH TO ON.** **(§)** Depending on settings, you may find OUT1 (or 2) already turned on (see table 11.9).

Section 20.0 - SAE1939 TEST, RS485 TEST & PICKUP TEST

CANBUS TEST	**Instructions** (to enter this menu, read the procedure on the top of section 4.0)
CANBUS TEST [ENGINE TYPE] DISCONNECTED CANBUS TEST STANDARD J1939 CONNECTED RX TX	This function allows you to test the Can bus communication port JD1-2-3-4. We recommend that you connect a compatible ECU SAE J1939 ECU according to the engine manufacturer engine wiring diagram. You are required to program an Engine Type that matches your engine or at least the 'STANDARD J1939' model (see section 11.2). Once the communication is running, the display should indicate the type of engine you have programmed (in the example on the left **[STANDARD J1939]**) and the status of the connection including the blinking messages **[TX] [RX]**. If, despite all your efforts in making the connection, the test fails to work, you have to return the Be124 to Bernini Design for service.
RS485 TEST	**Instructions** (to enter this menu, read the procedure on the top of section 4.0)
RS485 TEST CLIENT N. DISCONNECTED RS485 TEST CLIENT N. 1 CONNECTED RX TX	This function allows you to test the MODBUS communication via the RS485 port JB1-2-3-4. We recommend that you connect a computer using the Bernini Design USB/RS485 converter. You are required to run a software for Modbus communication (you can find demo versions on the internet). Basic settings are: Baud rate=9600 / Node=1 / No parity / Data Bits= 8 / Stop bit=1 / TX mode= RTU / Flow control=none / silent interval=4 character. You are required to read the input register with address 30039 (Battery Voltage). The display should indicate the node address (Client nr.) and the blinking messages RX/TX. If the test fails to work, you have to return the Be124 to Bernini Design for service.
PICKUP TEST	Instructions (to enter this menu, read the procedure on the top of section 4.0)
PICK UP TEST INPUT HIGH FREQ 0 Hz	This function allows you to test the PICKUP. Program the PICKUP/W ratio to 60 (see section 11.5.5) and connect it as indicated in section 28.0. The display shows the logic level of the PICK-UP: HIGH or LOW. By moving a ferrous material closer to the pickup head you should be able to see switching between HIGH and LOW (or vice versa). The display, in this way, indicates that the pick up is able to work. If you are able to run the engine and setup the pickup properly, you should be able to red the frequency in Hertz (range 0-20.000 Hz).

Section 20.1 - GENERATOR CONTROLLER CALIBRATION

CALIBRATION	**Instructions** (to enter this menu, read the procedure on the top of section 4.0)
L1-N (V) XXX L2-N (V) XXX L3-N (V) XXX FREQUENCY 00.0 CURRENT 1 XXXX CURRENT 1 XXXX CURRENT 1 XXXX BATTERY XX.X RESTORE DEFAULTS	This function allows you to calibrate the Measurements. Be124 features a worst-case factory precision of about +/-2%. You can reduce the error down to zero. - Turn on the key & start the engine in manual mode of operation. - Push the 'LEFT' arrow to open the main menu. - Push the 'DOWN' arrow until you reach the menu 'CALIBRATION' . - Push the 'RIGHT' arrow to enter the CALIBRATION; Push the 'UP'/'DOWN' to select the 'Measurement'. - Push the 'RIGHT" arrow to enter the 'Measurement' numerical field. - Adjust the 'value' according to the indication provided by an external measurement instrument. - Once the reading is stable you can exit the calibration by using the 'LEFT' arrow. - The BE124 automatically stores the calibration into internal Non-Volatile memory. - Remove the DC supply (battery) for a few seconds. Re-apply the supply. - Start the engine in manual mode and check if the Measurement is according to your requirements. - In case of uncertainties you can cancel all CALIBRATIONS by using the RESTORE DEFAULTS menu. - Enter the menu 'RESTORE DEFAULTS' and follow the instructions provided by the display (the Be124 will no longer use your calibration but it will use the factory settings). contact us for support: bernini@bernini-design.com

Section 21.0 - READING OEM/USER PARAMETERS

Turn the key to 'OFF' position. Repeatedly push **[←]** until the message **[ENGINE METERING]** appears on the top of the display. Repeatedly push **[↓]** to select the function **[USER PARAMETERS]** or **[OEM PARAMETERS]**. Push **[→]**; the following screen will appear (the following example shows **[OEM PARAMETERS]**)

Example: OEM parameters	Instructions
READ PARAMETERS **MODIFY PARAMETERS** **ENGINE TYPE**	A) - Push **[→]** to enter directly the read mode. B) - The list of the parameters or sub-menus will appear. C) - Choose an item by using **[↑]** or **[↓]**. D) - Push **[→]** to read details about the item. E) - Repeatedly push **[←]** to return or exit.

Section 22.0 - PROGRAMMING OEM/USER PARAMETERS

22.1 Preliminary operation

Turn the key to OFFposition. Repeatedly push **[←]** until the message **[ENGINE METERING]** appears on the top of the display. Repeatedly push **[↓]** to select the function **[USER PARAMETERS]** or **[OEM PARAMETERS]**. Push **[→]**; the following screen will appear (the following example refers to the **[OEM PARAMETERS]**)

Display	Instructions
READ PARAMETERS **MODIFY PARAMETERS** **ENGINE TYPE**	A) - Push **[↓]** to select the item **[MODIFY PARAMETERS]** B) - Push **[→]** to enter the programming or push **[↓]** and then **[→]** if you want to modify the type of engine (section 11.2) **See section 10.0 if you are looking for User Parameters list or section 11.0 if you are looking for OEM Parameters list.**

22.2 Type the Password

If a password was inserted, the Be124 will present a screen to ask for the password as indicated below, otherwise follow directly the instructions on section 22.3.

Display Indication	How to insert a password
INSERT PASSWORD **BACK** **-***** **OK** **[←]** **[→]**	**A) -** Use [←] or [→] to select a digit of the password. **B) -** Push [↑] or [↓] to edit a number (0-9). **C) -** to edit the 4-digit password, repeat steps A) and B) **D) -** Select OK using the [→] button (the [OK] backlights when selected). **E) -** Push the [→] button to confirm the password.

22.3 Select a parameter

Choose the MENU of your interest by using the **[↑]** or **[↓]** push-buttons and then push **[→]** ; the list of the parameters will appear.

22.4 Programming a parameter (general guide)

- Select a parameter by using the **[↑]** or **[↓]** push buttons.
- Push the **[→]** button to enter the numerical or option field of the parameter.
- Modify the parameter value or modify the option by using the **[↑]** or **[↓]** pushbutton.
- Exit the numerical/option field using the **[←]** pushbutton (return to the parameter list).
- You can modify another parameter by repeating the previous steps
- Repeatedly push the **[←]** pushbutton; the Be124 will present you with 3 possibilities:

EXIT [←] **SAVE** 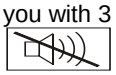 **BACK [→]**

Choose the option you need. After saving, we recommend that you disconnect the supply for a few seconds, re-apply the supply and verify that the modifications have been saved in a way that Be124 operates according to your requirements.

Section 23.0 - ALARMS: WARNINGS & SHUTDOWNS

The Be124 features:

A) - A yellow LED to indicate a warning and a red LED to indicates a shutdown.
B) - Symbols and LEDs, used to indicate Low Fuel / Low Oil Pressure / High Temperature alarm.
C) - A horn output **(°)** and two alarm repeat outputs.
D) - Descriptive messages of the alarms with date & time.
E) - Event History Memory able to record 500 alarms and events (see section 7.0).
F) - An **[ACK]** pushbutton to silence the Horn.

(°) The terminal JF-6 drives a horn via a relay. To silence the horn, push the **[ACK]** pushbutton or wait for the **[HORN TIMEOUT]** timer to expire (see section 11.7). If the **[HORN TIMEOUT]** is set to **[OFF]** (in other words, no time-out), the only way to silence the horn is by using the **[ACK]** pushbutton).

Instructions in case of alarm(s):

1) Look at the front panel and take note of LED indicators and message(s) on the display.
2) Some alarms, in order to cool down the engine, shutdown the engine after a programmable delay. We recommend that you wait the complete stop of the engine has been affected.
3) Push the **[ACK]** pushbutton to silence the horn. Turn the key to OFF to cancel the alarm.
4) Consult the following sections for further information and remove the cause of the alarm.

The list of the alarms is indicated below on the left side. Additional information is provided on the right side. Shutdowns are serious alarms and will stop the engine; warnings and pre-alarms will allow the engine to run.

23.1 - Clock and Memory alarms		Section
CLOCK ERROR WARNING	Real time clock failure or wrong programming. This alarm takes place in case you failed to program the Real Time Clock before programming the Scheduler (see section 10.2)	8.0 10.2
PARAMETER ERROR	Error in a parameter. Try to re-program the parameter correctly.	**This is a fatal error. Consult Bernini Design for support**
MEMORY ERROR	Failure of the memory. Remove the supply for a few seconds. Apply the supply. If the problem persists, the BE124 is damaged.	
CAN BUS ERROR WARNING	Failure of the Canbus communication. Check the wiring & CAN bus settings.	

23.2 - Emergency Input (alarms & warnings)		Section
ALARM 1 WARNING **ALARM 1 SHUTDOWN**	Input 1 (JC-10). Warning or Shutdown; see table 11.8.	11.8 [1]..[5]
ALARM 2 WARNING **ALARM 2 SHUTDOWN**	Input 2 (JC-9). Warning or Shutdown; see table 11.8.	
ALARM 3 WARNING **ALARM 3 SHUTDOWN**	Input 3 (JC-8). Warning or Shutdown; see table 11.8.	
REMOTE LOCK SHUTDOWN	An input programmed with option [7] is active. The Be124 shuts down the engine if running. When you disable the input, the alarm will automatically reset. The Be124 will operate normally; the engine may re-start automatically.	11.8 [7]

23.3 - Miscellaneous engine alarms			Section
PICK UP ERROR FAILURE	The alarms triggers when the detected speed is lower than CRANK-RPM setting.To enable this alarm you are required to set a PICK-UP ratio (see 11.5.5) and a CRANK RPM (see 11.4.4). The Be124 provides a by pass alarm of about 20 seconds after detecting an engine running condition.		11.5
OVER SPEED SHUTDOWN	Over Speed shutdown		
UNDER SPEED SHUTDOWN	Under Speed shutdown		
BATTERY VOLTAGE WARNING	Battery Voltage Limits: 11,8V/15,5V (12V battery) and 23,6V/31V (24V battery). A bypass delay of 2 minutes is provided. In case of warning, check connections or status of the battery equipment.		28.0 27.0
FAIL TO START SHUTDOWN	Fail to start shutdown	**High Severity Alarm: check the charger alternator or the settings for the engine running condition. See section 24.0**	
FAIL TO STOP SHUTDOWN	Fail to stop shutdown		
BELT BREAK SHUTDOWN	Engine Belt break (or Charger failure) shutdown. You can disable the alarm by setting the option to 'OFF' into BELT BREAK parameter.		11.4.8

23.4 - Alternator alarms		Section	
UNDER VOLTAGE SHUTDOWN	The voltage of one or more phases has risen/fallen above or below the pre-set limit.	11.3.1	**These could be high severity or critical Alarms. The Be124 opens the Generator Circuit Breaker (GCB) in a way to protect the generator itself.** **Under voltage / Under frequency may be symptoms of overload. The engine will shut down after a cooling down time.** **The Be124 provides a shutdown to protect the load and the generator. Check the settings of the parameters and set properly the bypass timing of each alarm.**
OVER VOLTAGE SHUTDOWN		11.3.2	
UNDER FREQUENCY SHUTDOWN	The frequency has risen/fallen above or below the pre-set limit.	11.3.3	
OVER FREQUENCY SHUTDOWN		11.3.4	
OVER KVA SHUTDOWN	The power has exceeded the pre-set limit.	11.3.9	
OVER CURRENT WARNING	The current has exceeded the pre-set limit. The Be124 provides a warning and then, if the current rises above certain limit, will open the GCB and shuts down the engine after a cooling down time.	11.3.5	
OVER CURRENT SHUTDOWN		11.3.6	
SHORT CIRCUIT SHUTDOWN		11.3.7	
EARTH CURRENT SHUTDOWN		11.3.12	
ALTERNATOR FAILURE	The alternator has failed to provide the electrical parameters within the programmed settings. In case of uncertainty verify the settings.	11.3.8	**These are High Severity and Critical Alarms. The Be124 opens the Generator Circuit Breaker in a way to protect the load and stops the engine immediately.**
REVERSE POWER SHUTDOWN		11.3.10	
PHASE SEQUENCE SHUTDOWN		11.3.8	
PHASE UNBALANCE SHUTDOWN		11.3.11	

23.5 - Temperature alarms		Section
LOW COOLANT °C WARNING **HIGH COOLANT °C WARNING** **HIGH COOLANT °C SHUTDOWN**	You can set a Low/High limit. The alarms are ignored during Alarms-Bypass timing (see 11.4.9). Coolant temperature information is provided by CAN bus or by a sensor connected to input JC-6. Settings for the alarms are indicated in section 11.4.9 &10. If you use JC-6 to monitor the **COOLANT TEMPERATURE**, do not set any **AUXILIARY TEMPERATURE** alarm (this will avoid conflicts).	11.4.9 11.4.10 27.0
TEMPERATURE SW SHUTDOWN	'SW' stands for Temperature Switch (input JC-6 or one of the digital Input 1-2-3 configured with option [9]). To make the JC-6 working in digital mode (for the switch) simply set LOW/HIGH temperature alarm settings to OFF.	
OIL TEMPERATURE WARNING	Abnormal Temperature of the Oil; Warning or / and Shutdown. Oil temperature information is provided by the CAN bus only.	11.4.12 11.4.13 11.8
OIL TEMPERATURE SHUTDOWN		
AUX °C SENSOR WARNING **AUX °C SENSOR SHUTDOWN**	Auxiliary Temperature: you can set Warning /Shutdown as indicated in section 11.4.13. You are required to connect a sensor to input JC-6. In this case you are no longer allowed to use JC-6 for **COOLANT TEMPERATURE** (it must be provided by CAN bus or a temperature switch connected to a general purpose digital input).	
AUX °C SENDER OPEN	It indicates the failure of the temperature sensor connected to JC-6 (resistance over 2100 Ohm)	27.0
GND SENSE OPEN	It indicates the failure of the connection of the terminal JC-4. The reading of temperature may be not accurate.	

23.6 - Fuel Level alarms		Section
LOW FUEL LEVEL WARNING HIGH FUEL LEVEL WARNING TANK EMPTY LEVEL SHUTDOWN	The Be124 monitors the level of the fuel in the tank. You can set warnings about fuel level. The Be124 shuts down the engine if the level drops (level sensor) below the limit for more than the programmed time. To enable the analog mode for input JC-5 you are required to set at least a Low or High level limit (see section 11.6)	11.6
FUEL RESERVE WARNING	This warning energizes during the TANK EMPTY DELAY. It indicates that the fuel is going to run out.	27.0
TANK FILL TIME WARNING	This warning energizes if the PUMP to fill the tank remains activated for more than the programmed time.	28.0
FUEL SENDER OPEN	Failure of the Fuel Sensor (input JC-5). The Be124 detects a resistance over 2100 OHM (e.g. open circuit).	
GND SENSE OPEN	Indicates the failure of the connection of the terminal JC-4. The reading of the fuel level may be not accurate.	

23.7 - Oil Pressure alarms		Section
LOW OIL PRESSURE WARNING LOW OIL PRESSURE SHUTDOWN OIL BAR SENDER SW SHUTDOWN	These alarms are ignored during **ALARMS BYPASS** timing (see 11.4.9). Oil Pressure information is provided via CAN bus or by a sensor connected to input JC-7. Settings for alarms are indicated in section 11.4.11. If you do not set an alarm, the Be124 will consider the input JC-7 as digital input. You are required to connect a Pressure Switch that closes the contacts when oil pressure is low.	11.4.11 11.4.9
OIL BAR SENDER OPEN	Failure of the Oil Pressure Sensor (JC-7 input). The Be124 detects a resistance over 2100 Ohm when the input is configured as 'analog sensor'.	
GND SENSE OPEN	Indicates the failure of the connection of the terminal JC-4. The reading of the Oil Pressure may be not accurate.	27.0

23.8 - Maintenance and Rental contract alarms		Section
SERVICE 1 WARNING SERVICE 2 WARNING SERVICE 3 SHUTDOWN	Maintenance 1 & 2 provide a warning after timeout. Service 3 provides a shutdown after timeout. To cancel the alarm, turn the key to 'OFF' position and push **[ACK]** for at least 5 seconds.	10.1
RENTAL 48h WARNING	Less than 48 hours remaining before engine shutdown.	10.3
RENTAL EXPIRED SHUTDOWN	Rental period termination. To cancel the alarm, reprogram the RENTAL or simply enter & exit the **[TEST & RENTAL]** program menu to restart the previous setting of the counter.	
MAXIMUM RUNTIME SHUTDOWN	Time expired. This timer allows the engine to run a limited number of hours in case of test launched by a remote computer or SMS (mobile phone). In case of alarm, verify the general status of the engine, cancel the alarm and restart the engine.	

Section 24.0 - DETECTING ENGINE RUNNING

The Be124 terminates the crank when the engine starts running. When the engine is not running, the voltage of the D+/W.L. connection on the charger alternator is 0V. When the engine starts running, the voltage of the D+/WL increases (Be124 delivers a current into D+/WL to help exciting the alternator). The point to terminate the crank is in between 6V to 10V. The default parameter of **[CRANK VDC]** (section 11.4.3) is 8.0V. For 24V batteries, we recommend that you set the threshold to 16V. The Be124 monitors the generator parameters providing additional safeties in terminating the crank. See the **[CRANK VAC]** and **[CRANK HZ]** parameters in sections 11.4.3 /11.4.4. In case you use a pick-up or 'W' you can terminate the crank by setting up the parameter **[CRANK RPM]** (see 11.4.4).

For a safe start please carry out this simple test:

- Disconnect the fuel solenoid (the engine will not start). Turn the key to 'START' and hold it.
- Push twice the [↓] button and read on the display the Charger Alternator voltage (see 5.02). The voltage should be lower than **[CRANK VDC]** setting. Make sure that Be124 does not terminate the crank while you hold the key in start position. Do not hold the key into 'START' for more than 20 seconds. Turn the key to 'OFF'.
- Reconnect the fuel solenoid, and start the engine in MAN mode. The display must indicate the message ENGINE RUNNING.
- Push twice the [↓] button and read, on the display, the Charger Alternator voltage (see 5.02). The voltage measurement should be closer to the battery voltage indication (see the value in the same display screen).

NOTE: if you leave the terminal JF1 open (see section 28), the Be124 will detect immediately a condition of engine running. The Be124 will not activate the Start Output JF-7. To disable the D+/W.L. monitoring you have to set OFF the CRANK VDC termination (see section 11.4.3) and the Belt break Alarm (section 11.4.8)

Section 25.0 - GENERATOR CONTROLLER SPECIFICATIONS

Supply Voltage: 5.5Vdc to 36Vdc, 10-150mA max. **Fuse:** internal 300mA electronic. **Reverse polarity:** -36Vdc

Supply Voltage Surge Protection: 100Vdc /500 Amps (8/20 microseconds). **Absorption capacity**: 8 Joule max

Cranking Dropout: Be124 survives 0V for a half-second (initial voltage before the dropout: 12Vdc).

Dimensions: 96mm X 96mm X 87,5mm. **Panel Size Cut-out:** 91mm X 91mm, indoor operation

Operating Temperature Range: -25 deg. C up to +70 deg. C. **Humidity Range:** 5% up to 95% non-condensing.

Weight: 550 grams. **General design:** ECC 89/336, 89/392, 73/23, 93/68, IEC 68-2-6. **Certification:** CE

Static Outputs Characteristics: positive logic with 150mA output current (Vbatt - 1Vdc), short circuit proof.

Generator Voltage: nominal voltage 70 Vac up to 600Vac (Ph-Ph) 347Vac (Ph-N). Over voltage: 4KVac Ph-Ph. Measurement precision (V/Hz): +/- 1% F.S.. Impedance: 2 M Ohm. Resolution: 1Vac .

Generator Frequency: nominal frequency 20.0 Hz up to 600.0 Hz. Measurement precision: +/- 1% F.S.. Impedance: 2 M Ohm. Resolution / Accuracy: 0,1Hz (20.0-600.0Hz).

Current Sensing: 5/5Aac up to 2000/5Aac. Maximum permanent current on the sensing inputs: 7Aac. Measurement precision: +/- 2%. Internal resistance: 0.05 Ohm. Resolution 0,1Aac (<500/5), 1Aac (>500/5).

Digital Inputs: open circuit voltage of approximately 4,5V - Trigger level: < 2Vdc (max 5mA). Maximum Overvoltage +/-100V 1 s. Permanent short circuit to Bt+ and Bt- allowed for unlimited time.

Analogue Inputs: resistance range 0 up to 1000Ohm. Current at zero Ohm: 5mA. Overvoltage +/-100V. Accuracy: 2%

Charger Alternator Monitoring: operating voltage up to 36Vdc/3W. Vdc reading accuracy +/- 2%.

Magnetic Pickup Input: 0,5V-50VRMS, 10-25KHz. RPM reading accuracy +/- 1%. Teeth Count: 10.0/500.0

CAN Port: fully isolated. 250Kb/second. Internal 120 Ohm impedance available for connection. Supports SAE1939 protocol.

RS485 Port: support Modbus Protocol and drives 1000 Metres twisted cable, ESD 2KV & drives up to 127 nodes.

Section 26.0 - SOFTWARE UPGRADES & REVISIONS

Firmware Versions	Date	Description
4.4X	Sept.2014	First Release (no reported problems)
5.56	March 2015	Time out Auto Start 999 minutes

Section 26.1 - ABOUT BE124

You can program, via computer, a raw of 16 characters to identify the controller (example your company Name and Serial Number). We recommend that you use our 'free of charge' software for control & monitoring. By default, the raw is 'blank'. To find out manufacturing details about Be124 & software version open the ABOUT menu:
1) turn the key to 'OFF' then push **[←]** until **[ENGINE METERING]** appears on the top of the display. 2) Repeatedly push **[↓]** to select the last menu of the list (**[ABOUT]**). 3) Push **[→]** to enter the Menu; the following screen will appear.

Display	NOTES
Be-124 V05.56 **CONVENTIONAL** **XXXXXXXXXXXXXXXX** **PRODUCTION - - / - - / - -**	The first line indicates the software version (in this example V04.44). The second line indicates the 'TYPE of ENGINE' programmed inside the controller (see 11.2). The third line displays the programmable16 alphanumeric characters string (no symbols allowed). The Factory default is blank (i.e. no characters). The fourth line indicates the date of the manufacturing of the controller (days-month-year). This screen appears, for a few seconds, all the time the DC Supply is connected to the Be124.

Section 27.0 - TERMINAL DESCRIPTION (1 OF 2)

!! WARNING !! ANY INTERRUPTION OF THE PROTECTIVE GROUND OR DISCONNECTION OF THE PROTECTIVE EARTH IS LIKELY TO MAKE THE Be124 DANGEROUS

Connector JA: 4 Poles (Phoenix P.N. 1767025 / 7.62mm) Generator Voltage Inputs			
JA-1	Generator Voltage 600Vac max Phase-Phase	L1	You are required to connect these terminals to the generator. We recommend that you protect the cables and connections by using 1A (fast blow) fuses.
JA-2		L2	
JA-3		L3	
JA-4		N	

Connector JB: 4 Poles (Phoenix P.N. 1745917 / 3.81mm) RS485-Modbus RTU		
JB-1	Common Ground	RS485 serial interface Port. Consult the Be-485/USB converter User Manual for information. We recommend that you use Belden 9841(or similar) twisted pair cable.
JB-2	SIGNAL B	
JB-3	SIGNAL A	
JB-4	Termination 120 OHM	

Connector JC: 10 Poles (Phoenix P.N. 1748053 / 3.81mm) Analog & Digital Inputs		
JC-1	Magnetic Pickup (-) / W	You can connect a magnetic pickup to detect the speed of the engine. As option, if pickup is not available, you can connect the 'W' terminal of the charger alternator to JC-1. In this case connect terminals JC-2 & JC-3 together by using a short wire. You are required to set the number of teeth in the parameter **[PICKUP/W RATIO]** (see section11.5.5).
JC-2	Magnetic Pickup (+)	
JC-3	W Enable	
JC-4	GND Compensation (Ground Sense)	This is a mandatory connection if the Be124 it is more than 5 meters away from the engine. You are required to connect terminal JC-4 to the body of the engine (a solid connection is required). If the engine is closer, you can connect JC-4 to battery minus. If you do not use an analog sensor (only digital inputs) you can leave this terminal open.
JC-5	Fuel Level Sensor or Switch	This input monitors the Fuel Level sensor. See section 11.6 to set an alarm and table 11.10 for the programmable response curve. Factory programming sets the input in digital mode (you are required to connect a switch). To enable the analog mode, you are required to set at least one alarm (Low/High fuel) and connect the ground sense JC-4.
JC-6	Temperature Sensor or Switch	This input monitors the Temperature sensor. See section 11.4.10-11 to set an alarm and table 11.10 for the programmable response curve. Factory programming sets the input to digital mode (you are required to connect a switch). To enable the sensor mode you are required to set one alarm (Low or High temperature) and connect the ground sense JC-4.
JC-7	Oil Pressure Sensor or Switch	This input monitors the Oil Pressure sensor. See section 11.4.11 to set an alarm and table 11.10 for the programmable response curve. Factory programming sets the input to digital mode (you are required to connect a switch). To enable the sensor mode you are required to set one alarm (Low pressure warning or shutdown) and connect the ground sense JC-4.
JC-8	Configurable Digital Input 3	You can connect switches. Each input can be configured via software: see table 11.8 for the available options. You have options for normally closed or normally open contacts. The other side of the switches must be connected to battery minus terminal (or ground, supposing that battery minus is properly grounded).
JC-9	Configurable Digital Input 2	
JC-10	Configurable Digital Input 1	

Section 27.0 - TERMINAL DESCRIPTION (2 OF 2)

Connector JD: 4 Poles **(Phoenix P.N. 1745917 / 3.81mm)**		Canbus Port
JD-1	Common Ground	Canbus serial interface port (consult your engine manufacturer for the connections)
JD-2	Signal L	
JD-3	Signal H	
JD-4	Termination 120 OHM	

Connector JE: 5 Poles **(Phoenix P.N. 1754504 / 5.0mm)**		Current Inputs
WARNING! Do not disconnect this plug when the engine is running. By opening the secondary circuit of the C.T.'s you can generate a dangerous voltage. Never disconnect a connection of a CT when generator is working. You can seriously damage the controller and putting yourself in a serious risk of electrical shock.		
JE-1	Current Transformer L1 (S1)	Inputs for the Current Transformers. The nominal Current is 5A. To program the size see section 11.3.12
JE-2	Current Transformer L2 (S1)	
JE-3	Current Transformer L3 (S1)	
JE-4	Earth Fault sensing C.T. (S1)	
JE-5	Current Transformer Common (S2's)	S2 terminal of each CT must be grounded

Connector JF: 8 Poles **(Phoenix P.N. 1748437 / 3.81mm)**		PNP Static Outputs
JF-1	D+ / W.L. Input/Output	It provides 3W excitement for the charger alternator monitoring.
JF-2	Not Connected	Not to be used
JF-3	Configurable Output 2	It drives an auxiliary relay with a configurable function (see 11.9)
JF-4	Configurable Output 1	It drives an auxiliary relay with a configurable function (see 11.9)
JF-5	GCB Output	It drives the auxiliary relay of the Generator Circuit Breaker
JF-6	Alarm Output	It drives the Horn via an auxiliary relay
JF-7	Start Pilot output	It drives the Starting Motor via a start pilot relay
JF-8	Fuel Solenoid output	Energized to run output for Fuel solenoid and ancillary circuitry

6,3x0,8mmTerminals **(Use Insulated Faston Receptacles for 10-14AWG wire)**		Supply & Power connections
30	Plus Battery Vdc supply (DC plant supply)	An internal Electronic 300mA Thermal Protection is provided. If you have provision to use the Manual Start (terminal 50) we recommend that you provide a proper size of the cable (4.0 up 6.0 sq.mm or 10-14AWG).
-BT	Battery minus supply (DC plant supply)	Should be connected straight to the battery minus. We recommend that you use a wire with minimum size of about 2.5 sq.mm.
15/54	Auxiliary Supply Output	It could be used for ancillary circuits (dashboard). We recommend that you protect this connection using a 5A fuse (fast blow). It provides a voltage only when you turn the key to 'ON'.
50	Start (30Amps) output	This should be connected in case you use ***only*** the manual mode (no provision of AUTO mode). The simultaneous use of terminal '50' and a 'Start Pilot Relay' (connected to JF-7) ***may severely damage the engine.***

Section 28.0 - TYPICAL WIRING DIAGRAM

NOTE: if you leave the terminal JF1 open, the Be124 will detect a condition of engine running. The Be124 will not activate the Start Output JF-7. To disable the D+/W.L. monitoring you have to set OFF the CRANK VDC termination (see section 11.4.3) and the Belt Break Alarm (section 11.4.8). Read carefully the instructions in section 24.0

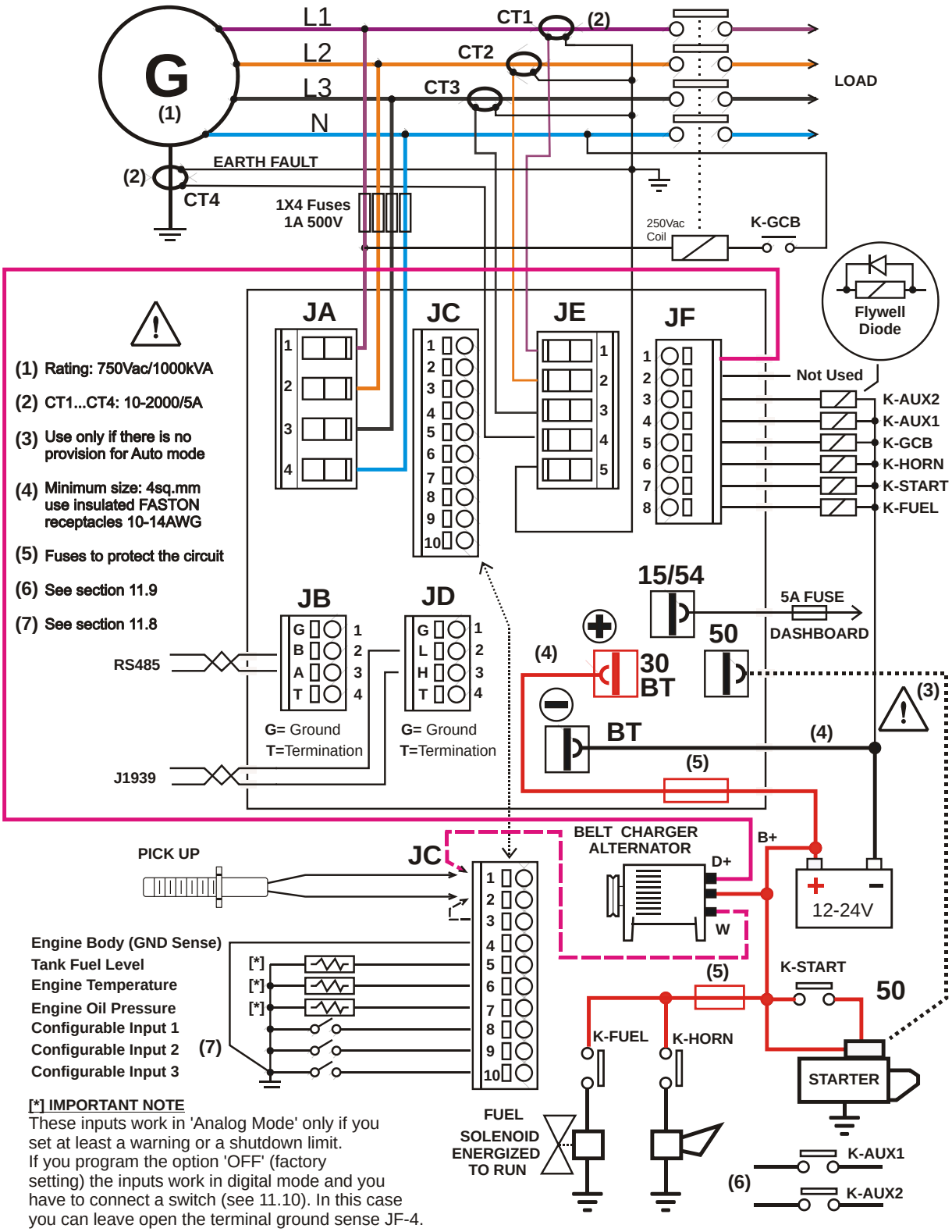

[*] IMPORTANT NOTE
These inputs work in 'Analog Mode' only if you set at least a warning or a shutdown limit.
If you program the option 'OFF' (factory setting) the inputs work in digital mode and you have to connect a switch (see 11.10). In this case you can leave open the terminal ground sense JF-4.

Section 29.0 - REAR VIEW AND DIMENSIONS

The following figure shows how the connectors are arranged on the back of the controller. The Phoenix codes of the removable female connectors are also provided on the left. See section 27.0 for detailed terminals description. Each controller comes with a full set of connectors, fixing clips and 2 keys.

JA	Phoenix 1767025 4-Poles 7.62
JB	Phoenix 1745917 4-Poles 3.81mm
JC	Phoenix 1748053 10-poles 3,81mm
JD	Phoenix 1745917 4-Poles 3,81mm
JE	Phoenix 1754504 5-poles 5.0mm
JF	Phoenix 1748437 8-Poles 3,81mm

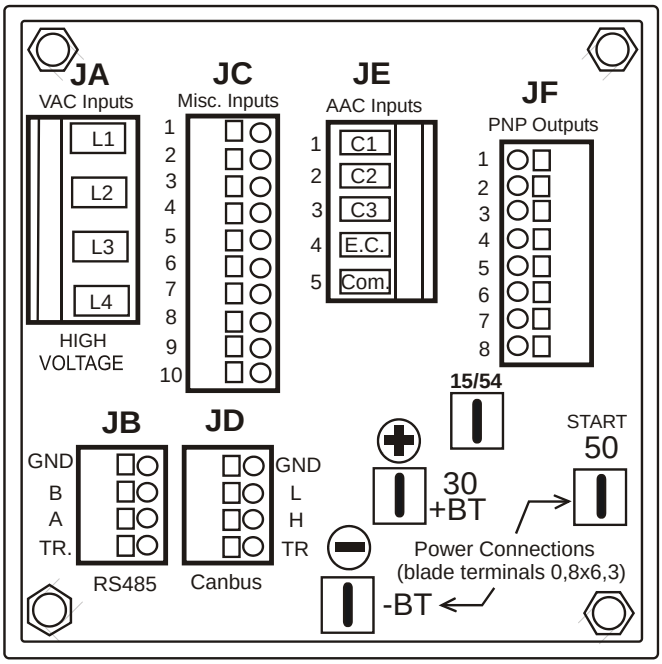

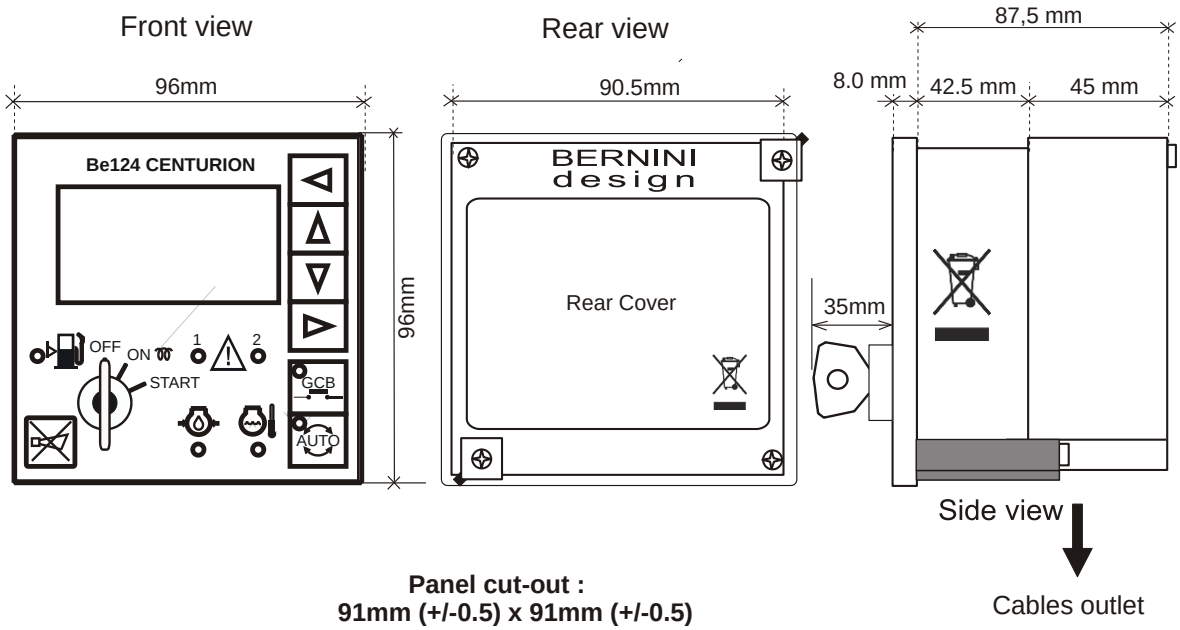

Panel cut-out :
91mm (+/-0.5) x 91mm (+/-0.5)